STRUTT | ev¹

User Manual EN

STRUTT.INC

Thank you for choosing the Strutt ev¹.

Product Introduction

The Strutt ev¹ is a smart everyday vehicle equipped with advanced sensors and an intelligent navigation system, designed to provide users with seamless short-distance travel solutions both indoors and outdoors. It features an ergonomically adjustable seat; support for multiple smart driving modes; and relevant international safety and electromagnetic compatibility certifications.

This User Manual is an essential guide for the safe and efficient use of the device, providing detailed instructions that cover assembly and setup, daily operation, regular inspections, troubleshooting, and maintenance. We strongly recommend that users, dealers, and sales team members carefully read and fully understand this manual.

Important Notice

- **Copyright protection:** All content in this manual - including text, images, and design - is the intellectual property of Strutt. Unauthorized reproduction or use of this material in any form without the prior written consent of Strutt is strictly prohibited.

- **Content updates:** Strutt reserves the right to update the product and manual at any time without prior notice. For the latest version of this manual and more information, please visit our official website: https://www.strutt.inc/.

- **Proper use:** Any operation that does not follow the instructions in this manual may cause damage to the device. If you notice any ambiguities or omissions in this manual, please contact your dealer or our customer service department immediately.

Intended Use

The Strutt ev¹ is designed to offer users a smart, safe, and easy-to-operate personal mobility solution, enhancing their independence and mobility in specific environments.

Important note

This device is designed and rated for indoor use and certain outdoor environments (e.g., sidewalks). Use on public roads is strictly prohibited. The specific legally permitted scope of use may vary depending on the laws and regulations of different countries or regions.

It is the responsibility of users to understand and strictly comply with all applicable regulations in their region regarding the use of everyday vehicles to ensure the safe and lawful use of this device.

User Manual Reading Instructions

Before using your device, please read this manual carefully and ensure that you fully understand its contents. To help you correctly identify safety information, please familiarize yourself with the following symbols and their explanations.

Safety Information Levels

Symbol	Meaning	Action required
Warning	Indicates an extremely high-risk situation that could cause serious injury or death if not avoided.	Must be strictly followed; violations are strictly forbidden.
Caution	Indicates a medium-risk situation that could result in minor or moderate injury, or damage to the device or property, if not avoided.	Handle with caution to prevent potential injury or damage.
Operational Instruction Symbols		
Things to avoid	Indicates an action that is strictly forbidden, as it may directly cause danger or device malfunction.	/
Key steps	Indicates a critical step or operation that must be performed to ensure safe and proper operation of the device.	/
Reference Information Symbol		
Guidance	Provides helpful supplementary information, descriptions, explanations, or guidance to help you better understand the device and use it correctly.	/

Contents

Introduction 03

1. Safety Precautions
- 1.1 Device Use 10
- 1.2 Riding and Operating 12
- 1.3 Assembly, Adjustment, and Disassembly 14

2. About the Device
- 2.1 Function Diagram 16
- 2.2 Accessories 19
- 2.3 Software Security, Data, and Privacy 19

3.Charging the Battery
- 3.1 Battery and Charger Components 22
- 3.2 How to Charge 22
  - 3.2.1 On-Device Battery Charging 24
  - 3.2.2 Off-Device Battery Charging 24
  - 3.2.3 Charger Indicator 25

4. Assembly, Adjustment, and Disassembly
- 4.1 Unboxing the Strutt ev¹ 26
- 4.2 Assembling the Strutt ev¹ 28
  - 4.2.1 Chassis Assembly 28
  - 4.2.2 Chassis and Main Support 31
  - 4.2.3 Seat Installation 32
- 4.3 Seat Adjustment 37

Contents

4.3.1 Seat Height Adjustment 39
4.3.2 Backrest Adjustment 42
4.3.3 Seat Width and Armrest Height Adjustment 46

4.4 How to Disassemble 52
4.4.1 Battery Disassembly 53
4.4.2 Seat Disassembly 54
4.4.3 Detaching the Main Support from the Chassis 56
4.4.4 Chassis Separation 57

5. Preparation for Operation

5.1 Inspection before Riding the Device 59
5.1.1 Powered-Off Inspection 59
5.1.2 Powered-On Inspection 60

5.2 Riding the Device 61
5.2.1 Transfer from the Front 62
5.2.2 Transfer from the Side 66

5.3 Seat Belt Instructions 68
5.3.1 Fasten the Seat Belt 68
5.3.2 Unfasten the Seat Belt 69

5.4 Powering On 70
5.4.1 Registration and Activation 72
5.4.2 Speed Adjustment 82
5.4.3 Switching Driving Modes 83
5.4.4 Using the Horn 84

5.5 Touchscreen Display Interface 85
5.5.1 AI Assistant 86
5.5.2 Drop-down Menu 88
5.5.3 Control Bar 89
5.5.4 Device Information 90
5.5.5 System Settings 91
5.5.6 Notification Center 91

6. Driving Strutt

6.1 Manual Driving Mode (M) 94
6.1.1 Basic Movement Control 94
6.1.2 Speed Control 96
6.1.3 Braking and Stopping 97
6.1.4 Driving Stability and Limitations 98

6.2 Assisted Driving Modes 100
6.2.1 Co-Pilot 104
6.2.2 Co-Pilot+ 105

6.3 Autonomous Driving Modes 106
6.3.1 Pathfinder 107
6.3.2 Waypoint 109

7. Storage and Transport

7.1 Storage 120

7.2 Transportation 121

7.3 Qstraint-QLK 150 Support 122

8. Maintenance and Care 124

9. Technical Specifications 126

10. FAQs and Solutions 130

Contents

11. Trademarks and Legal Statement

11.1 Trademark Statement 131

11.2 Copyright Statement 131

11.3 Legal Disclaimer 131

11.3.1 Product Performance and Right to Change 131

11.3.2 Limitation of Liability 131

11.3.3 Compliance with Laws and Regulations 131

11.4 Functional Disclaimer 131

12. Contact Information

12.1 Manufacturer 132

12.2 Importer 132

12.3 Agent 132

1. Safety Precautions

The Strutt ev[1] is a smart everyday vehicle designed with safety as a priority. However, any improper operation or disregard of these precautions may result in personal injury or damage to the device.

Guidance

Before using or handling the device, ensure that you read and fully understand all content in this manual:

- **Intended users:** Individuals who are unable to safely operate this device due to physical or cognitive limitations must not use it.
- **Operating environment:** This device is designed for use on standard paved surfaces and indoor environments.
- **Lending to others:** If you lend this device to another person, ensure that they have read, understood, and agreed to follow all safety instructions in this manual.

1.1 Device Use

Warning

Always follow these safety guidelines when operating this device. Failure to comply with these guidelines may result in serious injury or device damage.

- Wear a certified safety helmet.
- Use appropriate protective gear, such as elbow and knee pads.
- Wear non-slip, well-fitting shoes to ensure control of the footrests.
- Avoid wearing loose clothing to prevent entanglement in moving parts.
- Keep your seat belt fastened at all times while operating the device.

Key steps

- **Device condition inspection**
  Operation: Before using the device, check for improper assembly, missing components, or damage, and confirm the brakes are fully engaged.
  Risk Notice: Failure to inspect may lead to loss of device control, resulting in accidents and injury. If any problems are found, please stop using it immediately and contact your local dealer or customer service.

- **Incline limits and automatic speed control**
  Operation: The maximum permissible incline is 13°. The device automatically limits the maximum speed when a incline is detected.
  Risk Notice: There is a risk of tipping over on steep slopes. Automatic speed limiting is a key safety feature; bypassing this restriction by any means is strictly prohibited. Exercise extreme caution on slopes.

- **Handling abnormalities**
  Operation: Immediately cease operation if any abnormality occurs (e.g., unusual noise, control failure, or abnormal vibration).
  Risk Notice: Continued use of a malfunctioning device may result in complete failure of the device and serious injury.

- **Battery and charger safety**
  Operation: Read and follow all battery and charger instructions in this manual.
  Risk Notice: Improper handling (e.g., disassembly, impact, or exposure to moisture) of the battery or charger poses an extremely high risk of fire or explosion. Keep away from fire and high temperatures.

- **Magnetic Resonance (MR) environment**
  Operation: Do not bring this device into a Magnetic Resonance Imaging (MRI) room or nearby area.
  Risk Notice: This device is MR Unsafe. Strong magnetic fields may cause a projectile hazard, resulting in fatal injury.

- **When the device is not in use**
  Operation: Always power off the device or activate sleep mode when not in use.
  Risk Notice: Avoid unintended contact with the Screen, as it may cause the device to move unexpectedly, leading to collisions or falls.

- **Maximum load**
  Operation: The maximum load is 350 lbs (approx. 160 kg), including the operator and all baggage. Do not exceed this limit.
  Risk Notice: Overloading may seriously damage the structural and electronic components of the device, resulting in device failure and accidents.

1.2 Riding and Operating

Key steps

Warning

Strictly follow the guidelines below when riding or operating the device. Failure to do so may result in serious injury or device damage.

- **Getting on and off the device**
  Operation: Power off the device or activate sleep mode before getting on or off.
  Risk Notice: Prevent accidental movement of the device to avoid collisions with obstacles.

- **Environmental observation and speed control**
  Operation: Stay fully aware of the surrounding environment while driving. Exercise caution and maintain low speeds in crowded areas, confined spaces, near obstacles, on uneven surfaces, or on slopes.
  Risk Notice: Limited visibility or complex road conditions are very likely to result in collisions. There is an extreme risk of instability or skidding on wet or slippery inclines.

- **Driving in low-light environments**
  Operation: When driving at night or in poor light, turn on the device lights to ensure you are visible.
  Risk Notice: Poor visibility significantly increases the risk of collision with people or other vehicles.

- **Passing obstacles**
  Operation: When approaching low obstacles such as curbs and steps (below 50mm), pass slowly and carefully at a 90° right angle.
  Risk Notice: Passing diagonally at an acute angle may cause the wheels to get stuck, leading to device tipping or damage to the drive chassis.

- **Footrest use**
  Operation: Always ensure that the footrests are down and place both feet firmly on them while driving.
  Risk Notice: Dangling feet or improper foot placement poses a risk of entanglement in moving parts or collision with surrounding objects.

- **Parking downhill**
  Operation: When traveling downhill, slow down early and allow sufficient braking distance to stop safely.
  Risk Notice: Once the brake is released, the device can roll freely on slopes or uneven ground, which may lead to loss of control.

- **Moving the device manually (release brake)**
  Operation: Only release the brakes to move the device manually on level surfaces or in emergency situations with the power off. Immediately reset the brake release lever to the locked position after moving.
  Risk Notice: Overloading may seriously damage the structural and electronic components of the device, resulting in device failure and accidents.

Things to avoid

- **Driving in dangerous areas**
  Action: Do not operate the device in the following locations:
  - Escalators or stairs
  - Steps exceeding 2 inches (50 mm)
  - Slopes with a incline exceeding 13°
  - Soft or uneven road surfaces such as sand or mud
  - Snowy, icy, or slippery roads
  - Public roadways, highways, and any motor vehicle lanes

  Risk Notice: Operating in these environments may result in loss of balance, tipping, or loss of control, causing serious injury. This device is designed for use on flat paved roads and indoors.

- **Releasing brakes in non-emergency situations**
  Action: Do not release the brakes or move the device manually except for emergencies on flat roads.
  Risk Notice: After releasing the brake, the braking system does not work. On slopes or uneven roads, the device will move freely and may slide out of control, with a very high risk of collision and falls. Please lock the brake immediately after moving.

- **Improper riding posture**
  Operation: Do not squat, lean excessively out of the device, or shake it violently while riding. Always keep your body stable and centered while driving.
  Risk Notice: Improper posture will significantly change the device's center of gravity, seriously affecting its stability and easily leading to the device tipping over. If you need to reach for an object, come to a complete stop and seek assistance.

- **Driving while holding objects or carrying them on your lap**
  Action: Do not operate the device while holding heavy objects or with items on your lap.
  Risk Notice: This will distract your attention and may affect your operation of the joystick, causing unintended movement, steering, or sudden stops, leading to collisions.

- **Distracting behavior**
  Action: Do not use mobile phones, operate music players, or engage in any activities that may distract you.
  Risk Notice: Operating any mobile device requires your full and undivided attention. Distraction is a leading cause of collisions, falls, and other accidents.

- **Carrying passengers or pets**
  Action: Do not carry passengers, infants, or pets (this device is not designed to carry additional occupants).
  Risk Notice: Additional load may affect stability, balance, and braking performance, increasing the risk of tipping.

1.3 Assembly, Adjustment, and Disassembly

Key steps

Warning

Improper assembly, adjustment, or disassembly may cause malfunction, loss of control, or serious injury. The following guidelines must be strictly followed.

- **Following authorized procedures**
  Operation: Strictly follow the procedures and sequence specified in this manual for assembly, adjustment, or disassembly. Do not perform any repairs or modifications not described in this manual.
  Risk Notice: Unauthorized operations may damage the device structure or electrical system, resulting in serious safety hazards or injury. Operations not specified in this manual will void the warranty.

- **Ensuring a safe operating environment**
  Operation: Perform all assembly, adjustment, and disassembly on a flat, stable surface with the power off, battery removed, and the parking brake engaged.
  Risk Notice: Performing work on unstable or inclined surfaces or with the device powered on may cause unintended movement, falling parts, or electric shock.

Things to avoid

- **Electrical Connector Protection**

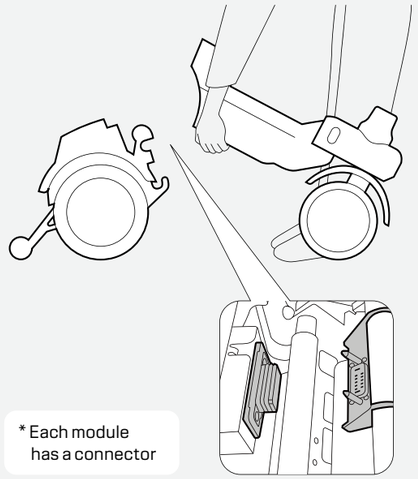

Action: Do not touch the metal contacts of electrical connectors with your hands, expose them to moisture, or allow debris such as metal shavings or dust to enter the connectors. Ensure connection areas are clean and dry during assembly.
Risk Notice: This may cause short circuits, arcing, or connector damage, leading to device malfunction, fire, or electric shock.

- **Cable management**
  Action: Do not compress cables with sharp objects, bend them excessively, or subject them to any tensile strain. Ensure that all cables are routed smoothly without risk of being pinched or pressed.
  Risk Notice: Damaged cable insulation may cause short circuits, unintended movement, or system failure, posing fire and injury hazards.

- **Using non-specified tools and components**
  Action: Do not use any tools, accessories, or components for assembly and adjustment other than those recommended or specified in this manual.
  Risk Notice: Using inappropriate tools or inferior accessories may cause thread stripping, component breakage, or insecure installation, resulting in catastrophic failure.

2. About the Device

2.1 Function Diagram

- **Vehicle**

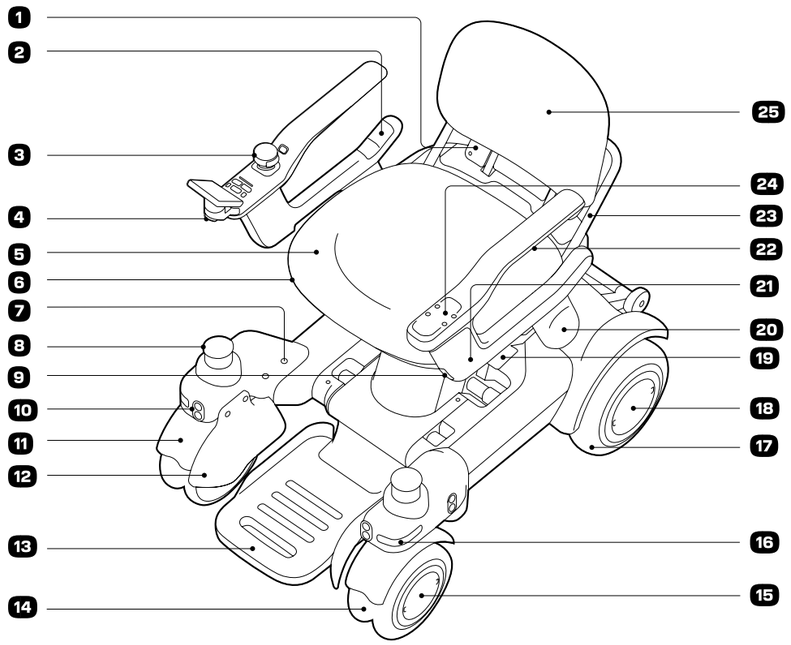

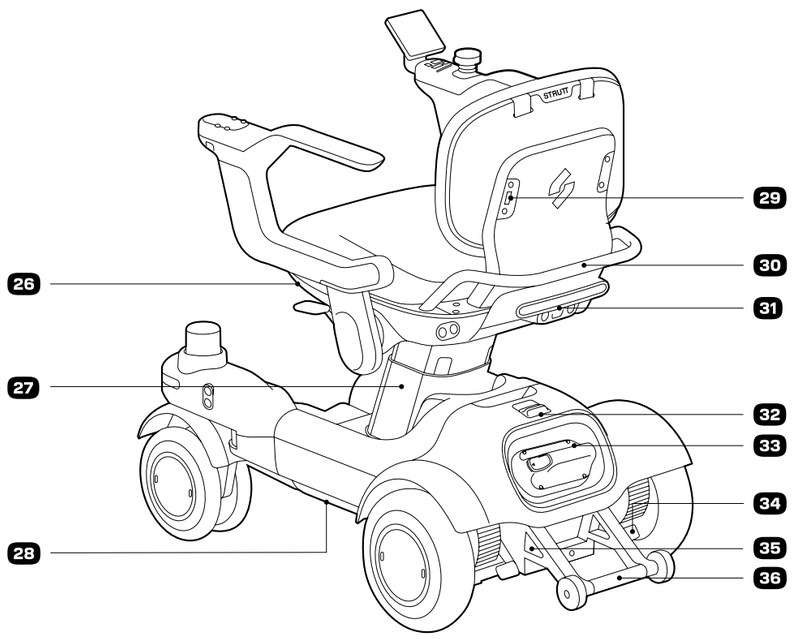

1 Backrest angle adjustment cover

2 Charging interface
Including Device Charging Interface (IN) and USB-C Charging Interface (OUT).

3 Screen module

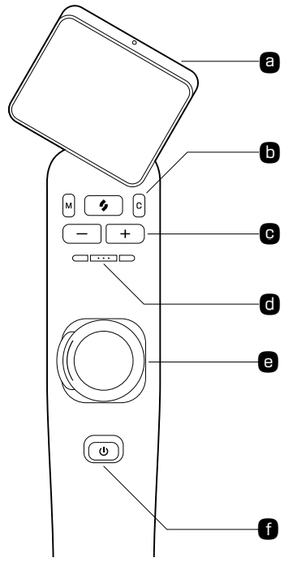

a Touchscreen
3 angles available. Watch video instructions for more details.

b Driving modes

M — Manual
Strutt button
C — Co-pilot

c Speed control
— Decrease
+ Increase

d Custom button
Horn by default, can be customized.

e Joystick

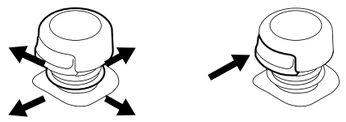

Push to navigate direction — Joystick button

f Power button
- Short press for wake up / sleep
- Long press for power on / off

4 Front camera

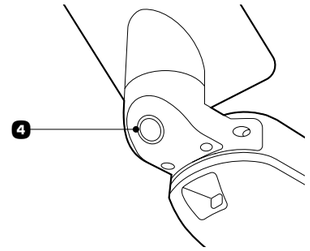

5 Seat cushion

6 Seat base

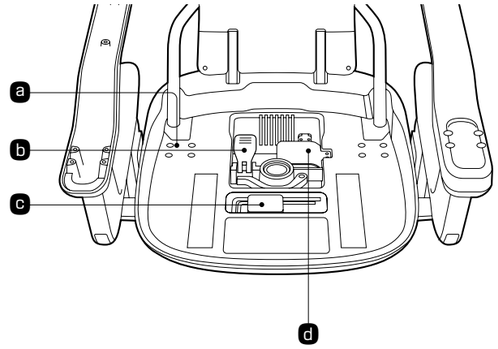

a Seat width adjustment screws
b Seat release lever
c H5 and H6 tool
d Occupancy sensor

7 Front wheel interface

8 LiDAR sensors (x2)

9 Front light

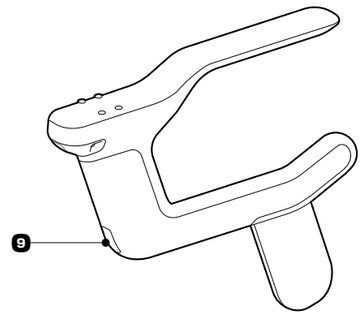

10 Ultrasonic sensors (x6)

11 Front mudguards (1 pair)

12 Wheel guard (1 pair)

13 Footrest

14 Front wheel module

15 Front wheel hub cap

16 TOF sensors (x10)

17 Rear wheel

18 Rear wheel hub cap

19 Armrest release lever

20 Armrest hinge cover

21 Armrest panel

22 Armrest underside interface

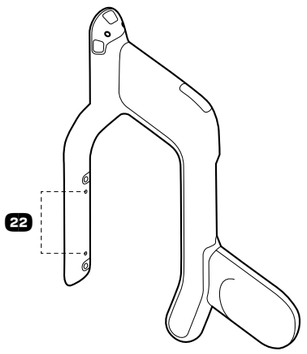

23 Seat belt installation interface

24 Armrest expansion interface

For accessories such as cup holders and phone holders.

25 Compact backrest

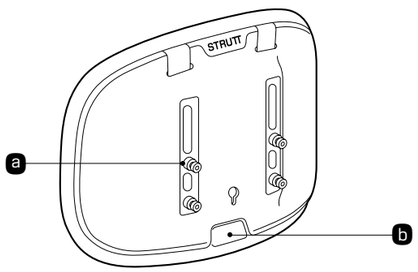

a Backrest fixing pin
b Backrest unlock buckle

26 Underseat tie-down

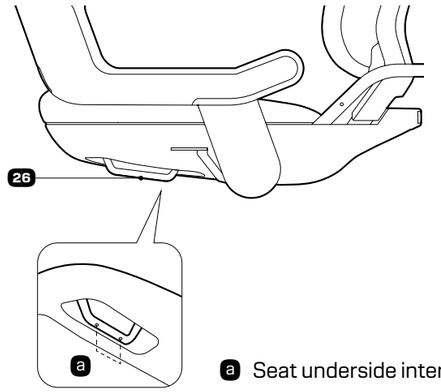

a Seat underside interface

27 Main Support

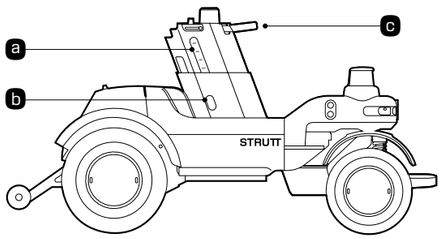

a Seat height scale
b Seat height adjustment screws
c Main support release lever

28 Vehicle docking interface

The illustrations can be found in Chapter 7.3 Qstraint-QLK 150 Support.

29 Backrest expansion interface

30 Storage rack

31 Rear light assembly

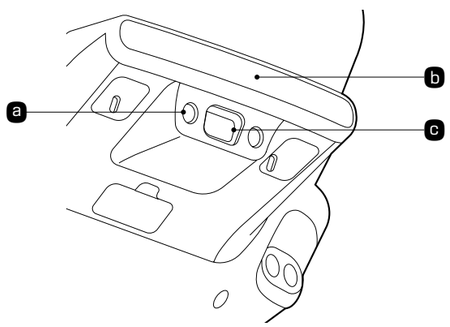

a Rear camera fill light
b Rear light
c Rear camera

32 Battery unlock switch

33 Battery

34 Brake release lever

The device can be pushed manually after unlocking.

35 Rear tie-down

36 Anti-tip bar

2.2 Accessories

Instructions for using official accessories

For the safety, performance, and reliability of your device, please adhere to the following guidelines:

- **Disclaimer:** The device must only be used with official Strutt accessories. Strutt assumes no liability or warranty obligations for device malfunctions, functional failures, or damages resulting directly or indirectly from the use of unauthorized third-party accessories. This disclaimer applies to the fullest extent permitted by law.

- **Importance of using official accessories:** Strutt accessories are specifically engineered and tested for your device to ensure optimal compatibility, safety, and long-term performance. Using third-party accessories not tested and certified by Strutt may cause compatibility issues, safety hazards (such as short circuits, overheating), and device damage.

- **Authorized channels:** For information regarding accessories tested and certified by Strutt, please use the following official channels for consultation, verification, and purchase:
  - Contact your authorized Strutt dealer.
  - Call or email the Strutt Customer Service Center.
  - Visit the Strutt official website: https://www.strutt.inc/

- **Note:** Before purchasing any accessories, please verify through the official channels above that they are officially certified to protect your rights and interests.

2.3 Software Security, Data, and Privacy

- **Software upgrade and security**
  - **Over-the-Air (OTA) updates:** This device supports wireless software updates. Before updating, ensure the device is safely parked, powered on, and the battery level is above 50%. The device will be unavailable during the update. Do not power off or interrupt the update process. Some functions or interface elements may change after the update.
  - **Software integrity:** Unauthorized installation, modification, tampering, or attempts to bypass system security are strictly prohibited. Such actions immediately void the product warranty and may introduce serious safety risks, cause device malfunctions, or lead to loss of control. Any resulting personal injury, device damage, or legal liability shall be borne solely by the user.

- **Data and privacy protection**
  - **Purpose of data collection:** To support core functions, ensure operational safety, perform diagnostics, and improve products and services, the system collects device information, including status, sensor data, diagnostic logs, anonymized usage statistics, and other related information.
  - **User control and consent:** Enhanced data collection for certain non-core functions (such as detailed environmental data used to improve intelligent driving algorithms) is subject to the principle of informed consent. You will be clearly notified and asked to provide explicit consent before these functions are enabled for the first time.
  - **Data processing and protection:** All relevant data is protected during transmission and storage using appropriate technical and organizational safeguards. We are committed to processing this data solely for legitimate, lawful, and necessary purposes as described. Unless required by law or with your explicit consent, we will not sell, share, or disclose your personal data to unrelated third parties. For more details on how your data is processed, please refer to our Privacy Policy: https://strutt.us/policies/privacy-policy.

3. Charging the Battery

- **First charge:** Please fully charge the battery before using the device for the first time.
- **After long-term storage:** If the device has not been used for a long time, please ensure that the battery is fully charged before using it again.

- **Driving range description:** The nominal maximum driving range of this device (20 miles/32 km) was measured under specific ideal conditions. Actual range will vary significantly depending on factors such as road conditions, driving habits, load, ambient temperature, and battery condition:
  - **Range mode:** 32 km / 20 miles
  - **Full-function mode:** 26 km/16.2 miles

Guidance

- **Recommendations for long-distance use**
  - Fully charge the battery before setting off.
  - Minimize the weight of items carried.
  - Plan the route in advance and avoid steep slopes and complex obstacles.
  - Maintain a steady speed; avoid frequent sudden braking or rapid acceleration.

Key steps

Warning

Improper charging may result in fire, explosion, or serious injury. The following guidelines must be strictly followed.

- **Complying with specific instructions**

  Operation: Read and follow all battery and charger instructions in this manual.

  Risk Notice: Non-compliant operation, especially regarding disassembly, impact, or exposure to moisture, poses an extreme risk of fire or explosion.

- **Securing a safe charging environment**
  Operation: Charge the device in a well-ventilated area, away from heat sources and flammable or explosive materials. Ensure a clearance of at least twice the device's size.
  Risk Notice: Charging in an enclosed space with poor ventilation or flammable gases present may allow flammable gases to accumulate, posing a fatal risk of fire or explosion.

- **Handling abnormalities**
  Operation: If the battery exhibits bulging, leakage, smoke, unusual noise, or overheating, stop use and disconnect the charger immediately.
  Risk Notice: Continued use or charging of a damaged battery poses an immediate risk of short circuit, fire, or explosion. Please stop use immediately and contact your local dealer or customer service.

Things to avoid

- **Do not disassemble**
  Action: Do not disassemble, puncture, or squeeze the battery or charger by any means.
  Risk Notice: These actions will cause internal short circuits, leading to uncontrollable fire or explosion.

- **Do not touch connectors**
  Action: Do not touch or short-circuit the metal contacts of the charging port with your hands or any objects.
  Risk Notice: The charging connector is live; touching it poses a serious risk of electric shock. Foreign objects may short circuit the interface, leading to fires.

- Do not expose the battery to fire or heat. Do not store it in high-temperature environments.
- Do not disassemble or modify the battery.
- Do not immerse the battery in water. If it is exposed to splashes or rain, wipe it dry immediately and ensure that it is completely dry before use.

- Keep the battery away from metallic objects (e.g., metal wires, necklaces, hairpins, keys, etc.) to prevent accidental short circuits.

- Disconnect the battery from the charger as soon as charging is complete. For indoor use only. Do not charge the battery outdoors.

- For daily use, it is recommend to fully charge the battery at least once a week.
- The optimal operating temperature for the battery is 10°C-40°C. Outside this range or when the power is below 30%, battery and device power performance may gradually decline. Attempting to climb steep inclines or cross obstacles under these conditions may trigger automatic shutdown protection; please operate with caution.

- The optimal charging temperature for the battery is 20-25°C. The battery automatically adjusts charging power based on its condition. Charging may take longer at extreme temperatures. Charging is disabled below 2°C or above 45°C.

- For any questions regarding the battery, please contact your authorized dealer or customer support.

3.1 Battery and Charger Components

- **Battery**

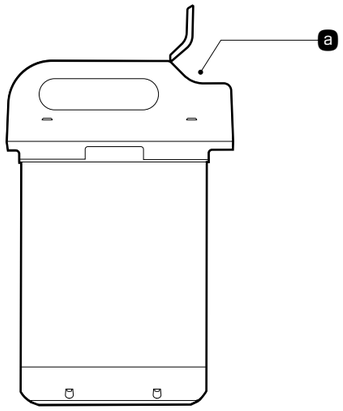

a Battery charging interface
Dedicated charging port with a keyed design to help prevent incorrect connection.

- **Battery Charger**

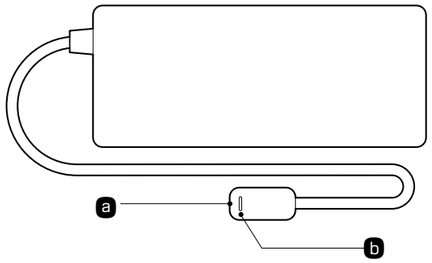

a Charger connector
Dedicated connector designed to match the charging port and provide a secure connection.

b Charger indicator light
Displays charging status using different colors and flashing patterns .

3.2 How to Charge

Things to avoid

- **Damaged battery use prohibited**
  Action: Do not charge or use the battery if it shows signs of damage, deformation, leakage, or water ingress.
  Risk Notice: Charging a damaged battery poses a high risk of fire or explosion. Stop use immediately and contact customer service.

- **Protecting device from rain**
  Action: Do not park or charge the device in locations exposed to rain.
- **Risk Notice:** Rain may enter the device's internal circuits, causing permanent damage, short circuits, and device malfunction.

Key steps

Warning

Improper charging operations may lead to fire, electric shock, explosion, or permanent device damage. The following safety regulations must be strictly followed.

- **Using official charging equipment**
  Operation: Use only the official Strutt charger provided with the device.
  Risk Notice: Unauthorized or third-party chargers may damage the battery due to voltage/current mismatches, posing a risk of overheating, fire, or explosion.

- **Ensuring a dry environment**
  Operation: Ensure that the charging port, charger, and power outlet are completely dry before connection. Do not charge the device in humid environments (e.g., bathrooms or outdoors during rain).
  Risk Notice: Exposure to moisture or humidity may increase the risk of short circuits and electric shock.

- **Charging port protection**
  Operation: Always keep the rubber dust cover closed when the charging port is not in use.
  Risk Notice: Prevent dust, foreign objects, or moisture from entering the port, causing corrosion and short circuits.

- **Charging in designated places**
  Operation: Charge only in indoor environments that meet applicable electrical safety codes.
  Risk Notice: Using non-compliant power sources or charging in unsafe environments increases the risk of electrical fires and injury.

3.2.1 On-Device Battery Charging

❶ Open the charging port cover.

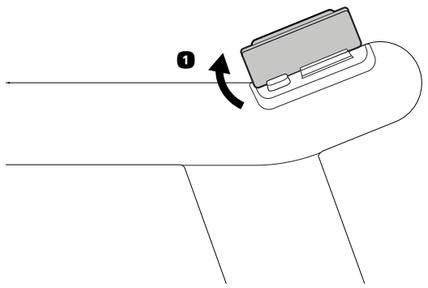

❷ Connect the charging plug.

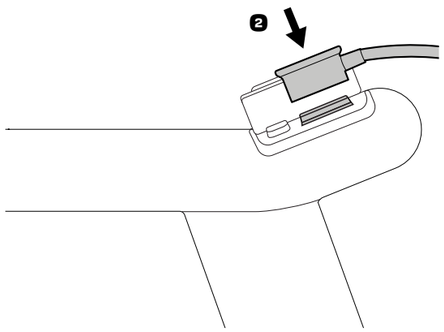

❸ Once charging is complete, disconnect the charger and securely close the charging port cover.

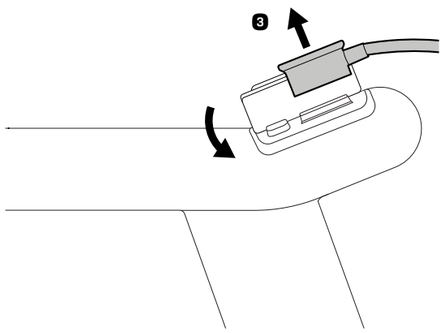

3.2.2 Off-Device Battery Charging

❶ Remove the battery from the device.

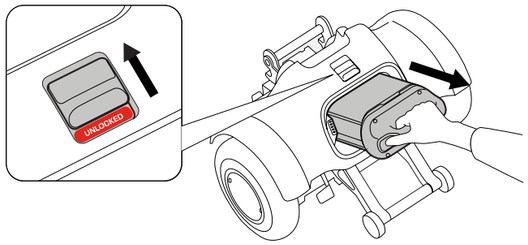

❷ Open the rubber cover on the battery port and connect the charger.

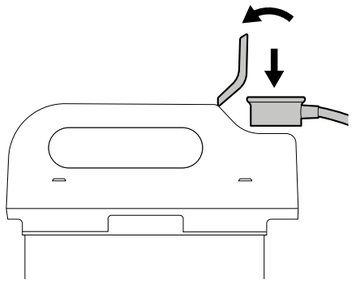

❸ When fully charged, disconnect the charger and press the rubber plug firmly back into place.

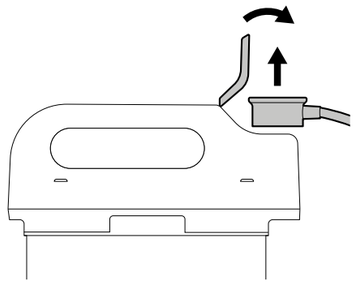

❹ Reinstall the battery into the device.

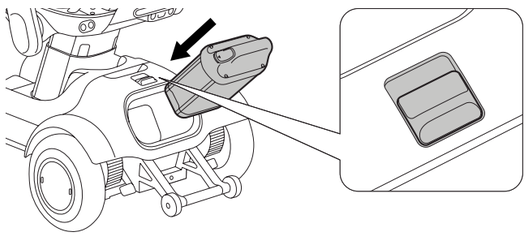

3.2.3 Charger Indicator

Icon	Indicator	Description
	Off, no indicator	The charger is not connected to AC power or the charger is damaged.
	Solid red light	The charger is not connected to the battery.
	Flashing red light	Charger fault: Check the charging environment and reconnect the battery or charger to restore charging. Battery fault: If the battery temperature is too low or too high, charging protection will be triggered. Charging will resume automatically once the temperature returns to normal.
	Flashing white light	The battery is charging; the current battery level can be estimated based on the flashing status. • One flash: 0–25% • Two flashes: 26–50% • Three flashes: 51–75% • Four flashes: 76–99%
	Solid white light	The battery is fully charged.

4. Assembly, Adjustment, and Disassembly

This section describes the components included with your Strutt ev[1] and provides assembly instructions.

4.1 Unboxing the Strutt ev[1]

Before use, check that all items in the box are present according to the list below, and carefully inspect the device and all accessories for any missing or damaged parts.

Caution

- This inspection is mandatory. It confirms that the product was delivered safely and that all parts are included.
- Do not use the device if you find any issues, such as manufacturing defects, visible shipping damage, missing items, or signs that the packaging has been opened or tampered with.
- In such cases, contact your authorized dealer or our customer service center immediately for further instructions and assistance.

- **WHAT'S INCLUDED**

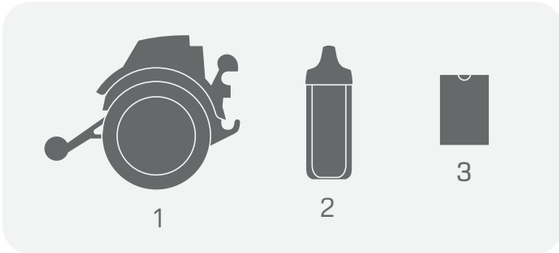

Box 1

1. Rear chassis
2. Long-range battery
3. Startup kit

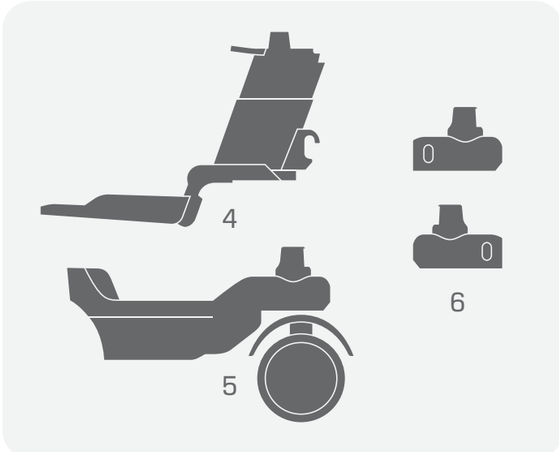

Box 2

4. Main support
5. Front chassis
6. Sensor covers

Box 3

7. Universal mount
8. Seat cushion
9. Screen module
10. Compact backrest
11. Seat
12. H3 Tool and screws kit
13. H5 and H6 tool
14. Charger cable
15. Fast charger
16. Seat storage
17. Accessory kit
18. Screen cover

4.2 Assembling the Strutt ev[1]

Key steps

- **Preparation**
  1. Packaging verification: For ease of transport, the Strutt ev[1] is disassembled into **four main components** and packed in **three separate boxes**. Before assembly, first make sure all boxes are present and show no significant damage.
  2. Component inventory: After unboxing, please check all parts against the packing list to ensure that no components are missing.
  3. Workspace setup: Assemble the device indoors on a flat, open, well-lit surface with enough room to work safely.

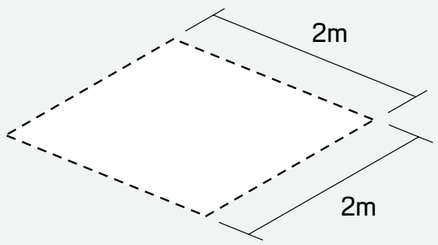

- **Personal readiness**
  Operation: Assembly requires some physical effort. If you feel unwell or cannot complete the assembly on your own, ask someone to help you, or contact your local dealer/customer service center for support.
  Risk Notice: Take care not to drop any parts due to fatigue or handling errors, as this may cause injury or damage to the device.

- **Reading and understanding**
  Operation: Before you begin, read this chapter carefully and make sure you understand the assembly instructions.
  Risk Notice: Following the correct assembly sequence is essential to ensure the device's structural integrity and safe operation. Improper assembly may result in device failure or lead to accidents during use.

* To ensure a safe assembly, please clear a level floor space of at least 2x2m before beginning.

4.2.1 Chassis Assembly

- **Before assembly, make sure you have the following components ready:**

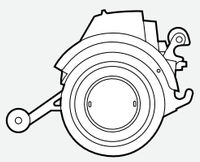

❶ Rear chassis

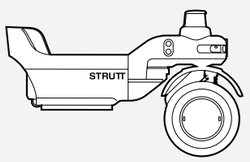

❷ Front chassis

Caution

- No additional tools are required for the assembly process.
- It is recommended to perform this operation on an open, flat floor.

❶ Safe removal of components

Caution

- Wear gloves to help prevent cuts or scratches from sharp metal or plastic edges.
- Carefully remove the rear chassis and front chassis from their boxes.

❷ Component placement

a. Place the rear chassis carefully on the ground as shown in the figure below.

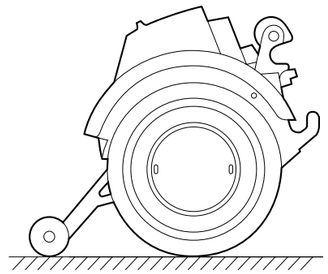

b. Place the rear chassis carefully on the ground as shown in the figure below.

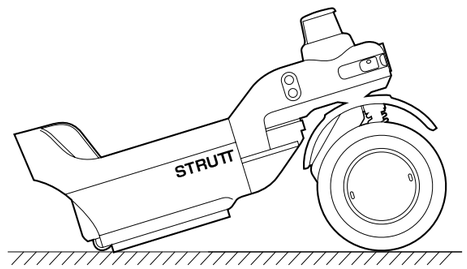

❸ Connection and engagement

a. Hold the front chassis firmly with both hands and place it directly in front of the rear chassis.

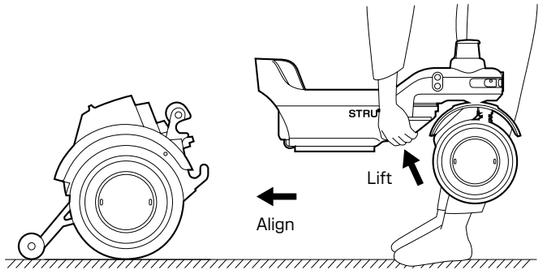

b. Slowly move it towards the rear chassis, ensuring that the connecting latches on both sides are precisely aligned.

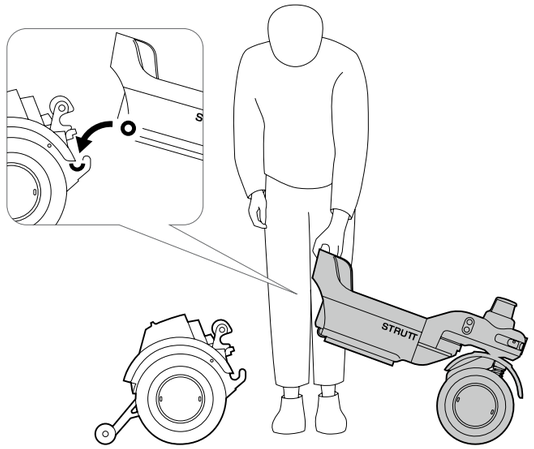

c. Once aligned, lower the front chassis steadily, allowing it to settle into place and fully engage the latches.

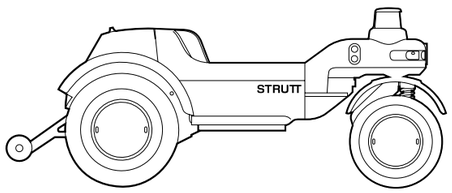

Mandatory Operations

- After completing the above steps, gently shake the chassis to make sure the connection is secure. If any abnormality is found, please repeat Step 3 to ensure that the latches are fully aligned and engaged.

4.2.2 Chassis and Main Support

- **Before assembly, make sure you have the following components ready:**

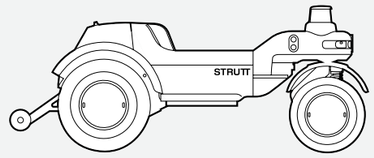

❶ **Chassis**

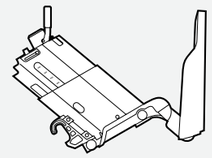

❷ **Main support**

❶ Lift the main support

a. Grip the Main Support Release Lever firmly with one hand.

b. Grip the footrest with your other hand and lift the main support.

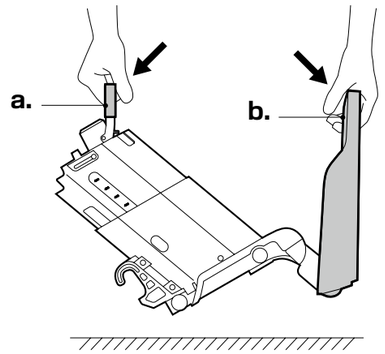

❷ Insert into the chassis

a. Slowly approach the assembled chassis with the Main Support at the angle shown in the figure.

b. Align the hooks at the rear of the main support with the exposed shaft on the chassis. Lower the main support until they connect

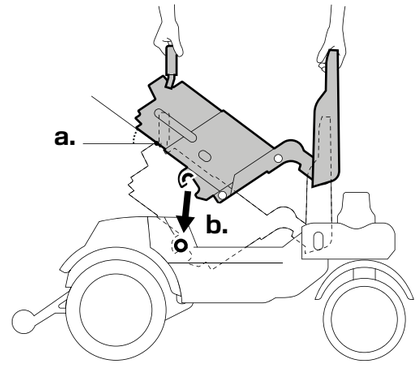

c. Carefully rotate the main support downwards until it comes to a stop.

d. Lower the release lever to secure the main support.

e. Finally, step on the footrest to ensure the main support is locked in place.

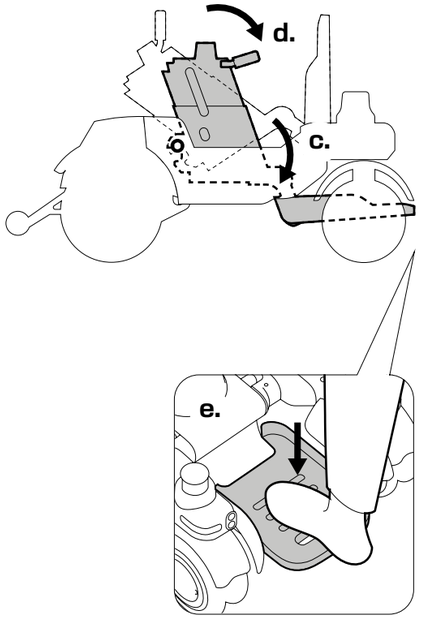

4.2.3 Seat Installation

1. Before assembly, make sure you have the following components ready:

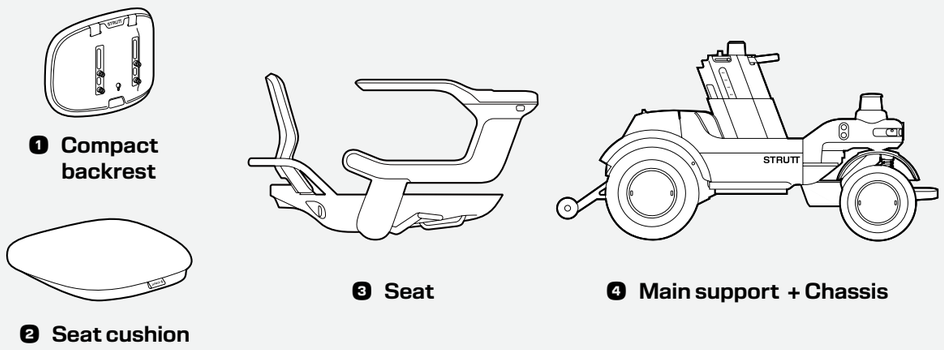

2. Lifting guide of the Seat:

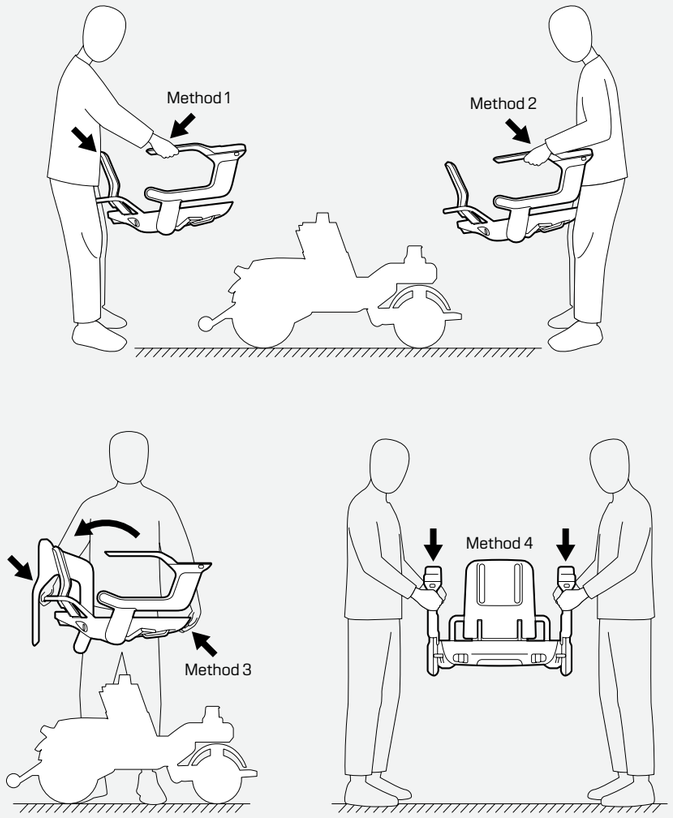

❶ Preparation

a. Locate the seat release lever in the center of the Seat.

b. Lift the release lever to prepare the seat for installation.

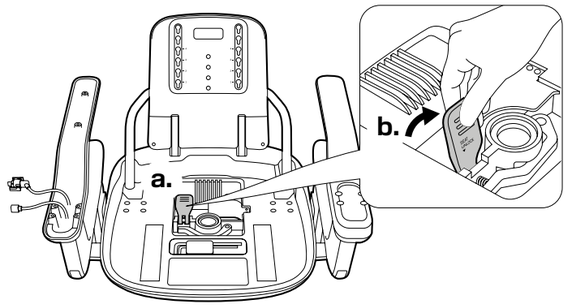

❷ Install the seat

a. Lift the Seat with both hands.

b. Precisely align the mounting hole in the seat with the seatpost that extends from the main support.

c. Ensure the alignment marks on both the seat and seatpost are aligned.

d. Once aligned, lower the Seat steadily until it is fully seated.

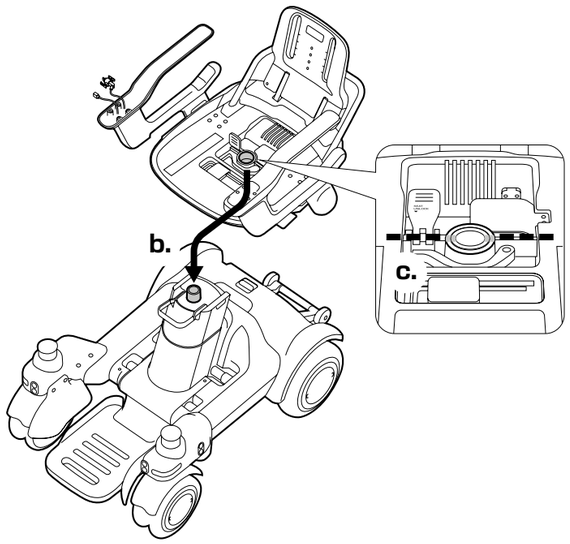

❸ Lock the seat

a. Firmly press the seat release lever mentioned in Step 1 to the "Lock" position.

b. After installation, make sure the seat is secure and does not move to ensure a firm connection with the Main Support.

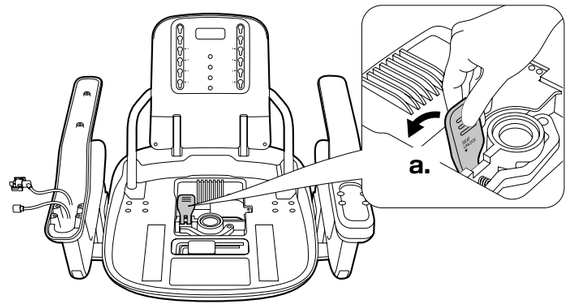

❹ Install the seat cushion

a. Place the cushion on the seat frame with the zipper side facing backward.

b. Adjust the cushion position to ensure that the hook-and-loop fasteners (loop side) at the bottom are fully aligned with the fasteners (hook side) on the seat frame.

c. Press down firmly to ensure that the fasteners are firmly attached.

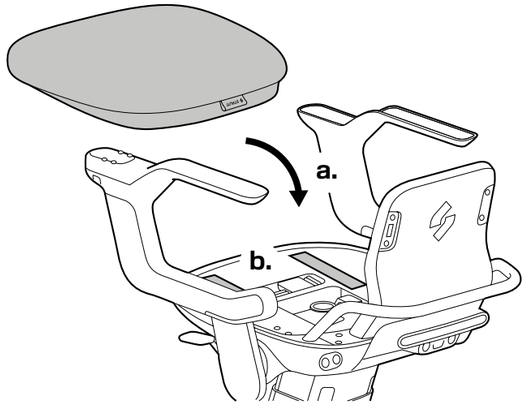

❺ Install the compact backrest

a. Align the mounting base at the bottom of the backrest with the mounting slot at the rear of the seat and insert it.

b. Insert the backrest vertically until you hear a "click", indicating that the internal latches have engaged.

c. After installation, gently push the backrest back and forth to check its stability. If there is no noticeable movement, the installation is complete.

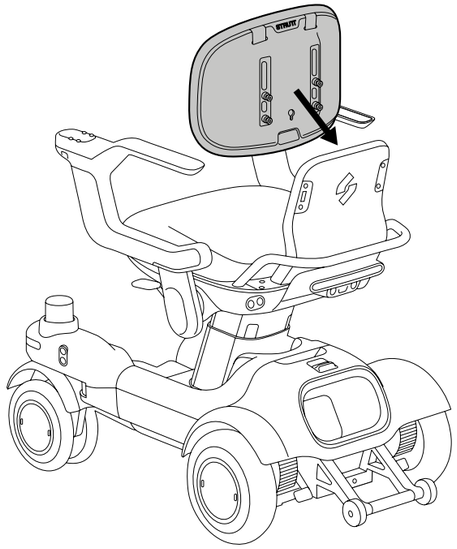

a. Insert the pins first

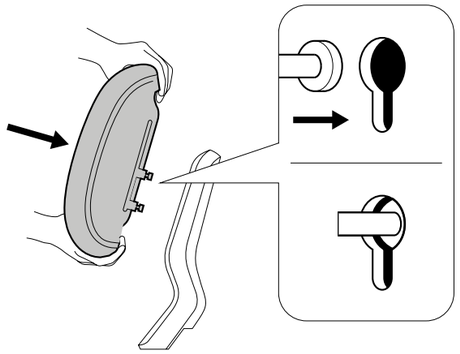

b. Then push down to lock

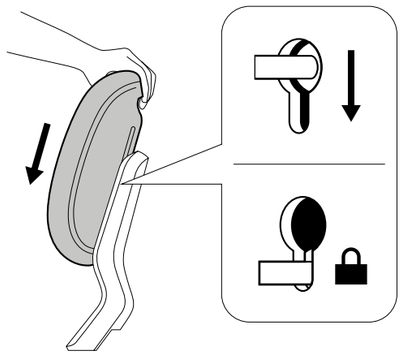

4.3 Seat Adjustment

After completing mechanical adjustments for seat height, armrest height, and seat width, you must select and confirm the updated position on the screen. This ensures the seat position is properly aligned with the control parameters of the driver assistance system for safe and stable operation. If these settings are not updated on the screen, the driver assistance system may not operate correctly. This step is mandatory. This section provides detailed instructions for personalized seat adjustments, including:

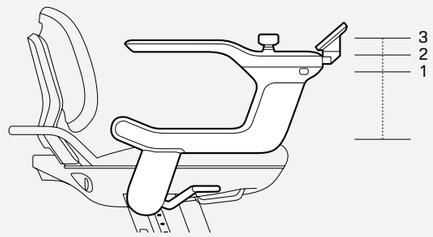

Armrest Height

8" - 10" / 200mm - 260mm

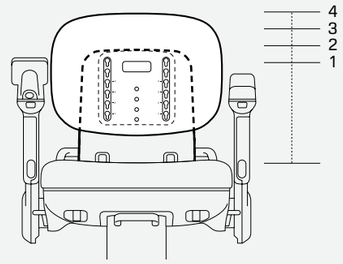

Backrest Height

13" - 17" / 350mm - 425mm

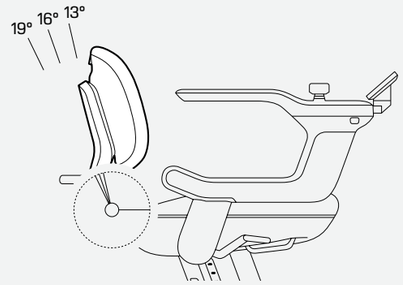

Backrest Angle

13° / 16° / 19°

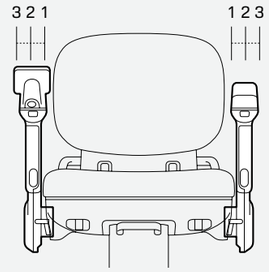

Armrest Width

17" - 20" / 442mm - 518mm

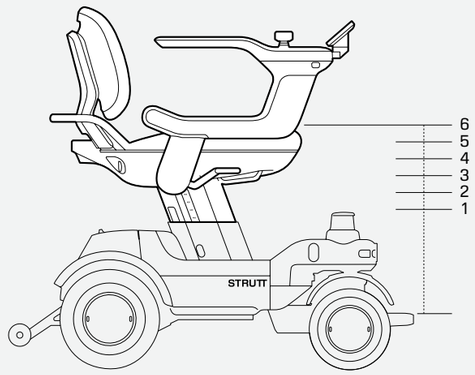

Seat Height

16" - 20" / 400mm - 500mm

Warning

Prohibited operations

- **Action:** Do not disassemble, adjust, or loosen any screws, nuts, or components not explicitly covered in this section.
  Risk Notice: Risk Notice: Unauthorized operations may damage the device's structural integrity, causing it to malfunction and resulting in serious injury.

Warning

- Seat height affects the performance of the driver assistance system: At the lowest seat height setting, rear obstacle detection is significantly reduced. When reversing or operating near rear obstacles at this setting, exercise extreme caution, closely monitor your surroundings, and be prepared to take manual control at any time.

Caution

- **Understanding and preparation**
  Operation: Before starting any adjustments, be sure to carefully read and fully understand all steps in this section.
  Risk notice: Incorrect operation sequences or the use of improper tools may result in component scratching, deformation, or damage.
- **Tools and fastening**
  Operation: Use the tools specified in this manual or equivalent tools of the same size. Once adjustments are complete, verify that all screws and locking mechanisms are securely re-tightened.
  Risk Notice: Using improper tools or failing to tighten fasteners adequately may cause components to loosen over time, which could cause a component to fail or fall off. If any screws are lost during the installation process, please stop operation immediately and contact your local dealer or customer service.

4.3.1 Seat Height Adjustment

Seat height can be changed by adjusting the length of the seatpost inside the Main Support. Proper seat height is essential for comfort and safety.

Required Tools:

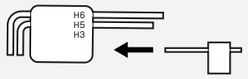

1. **H6 Tool**
2. **H3 Tool**
   H3 tool can be found in Box 3. Return the H3 tool to the under-seat tool kit after use.

Caution

- Use the specified tools to avoid damaging the screws.
- Adjustments must be performed with the device powered off and positioned on a stable surface.
- The Seat must be removed from the device before adjusting the height.

1 Disassemble the main support housing

a. Use the H3 tool to remove the two screws securing the Main Support housing on both sides.
b. Lift the handle.

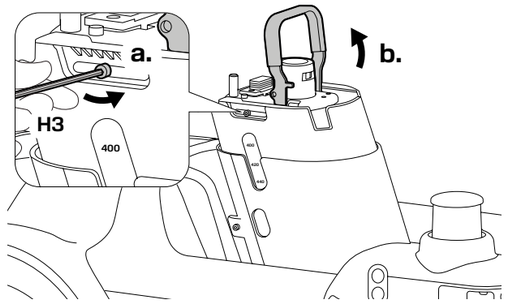

c. Carefully remove the housing to expose the internal components.

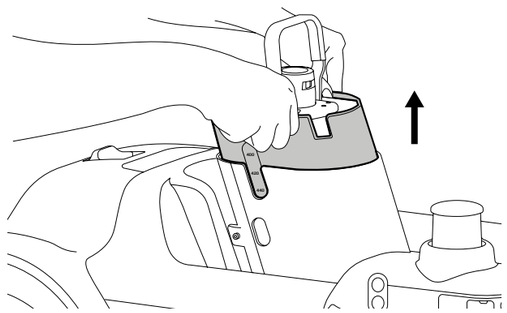

❷ Remove the fixing screws and adjust the height

a. Use the H6 tool to remove the two fixing screws completely from the Main Support.

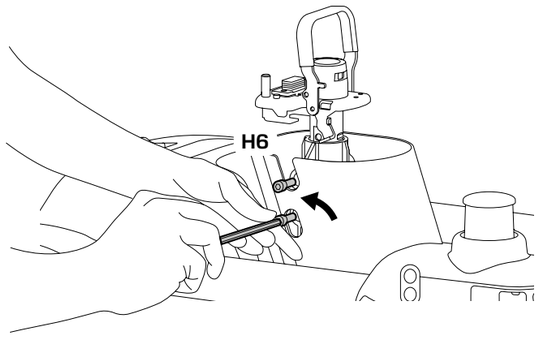

b. The seatpost can now slide freely. Use the height scale printed on the side to adjust it to the desired position.

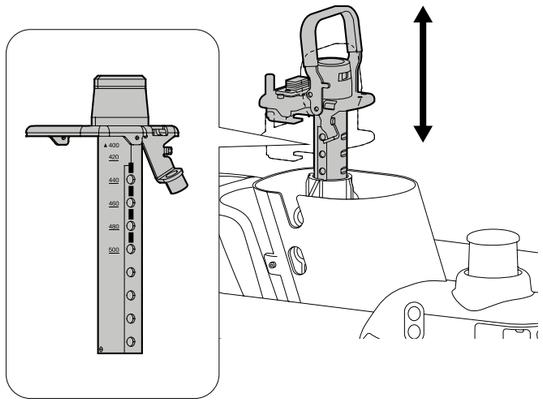

Specifications

Seat	User Height	
400	4.9 - 5.2 ft	150-158 cm
420	5.2 - 5.5 ft	159-166 cm
440	5.5 - 5.7 ft	167-174 cm
460	5.7 - 6.0 ft	175-182 cm
480	6.0 - 6.2 ft	183-190 cm
500	>6.2 ft	>190 cm

Guidance

a. Height scale definition: The height marking on the seatpost indicates the vertical distance between the Seat Cushion surface and the footrest surface.

b. Ergonomic adjustment: As a reference for seat height - adjust a typical office chair to a comfortable height and measure the distance between the floor and seat surface. Once seated, the user should be able to place both feet fully and comfortably on the footrest, with the thighs fully supported by the cushion.

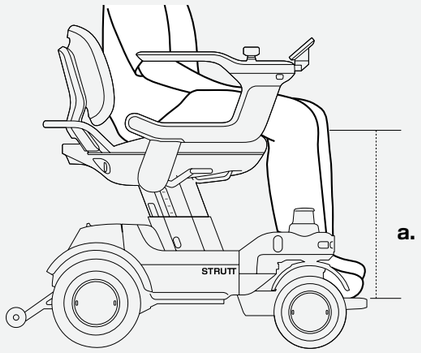

❸ Secure the seatpost

a. Hold the seatpost in position, and re-insert the two H6 screws into the corresponding screw holes in sequence.

b. Use the H6 tool to tighten both screws securely.

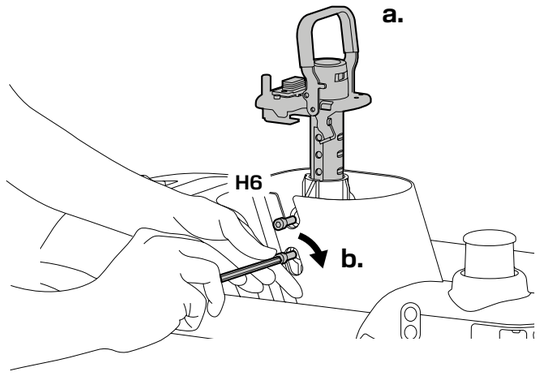

❹ Reinstall the main support housing

a. Snap the Main Support housing back into place.

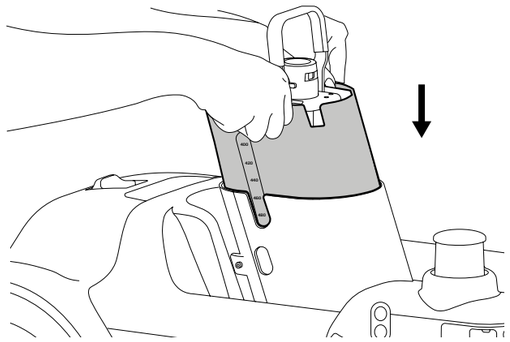

b. Use the H3 Hex Screwdriver to tighten the two housing screws.

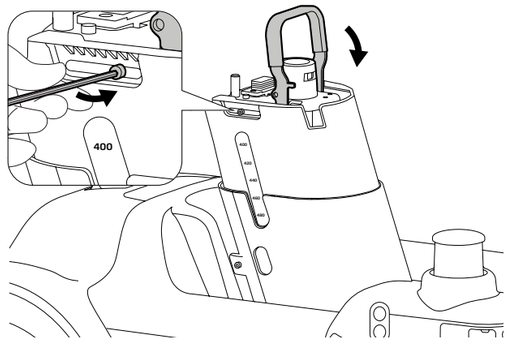

4.3.2 Backrest Adjustment

- **Backrest height adjustment**

1. Locate and hold the unlock button at the bottom of the backrest.
2. Keep pressing while pulling up the backrest to remove it from the mounting plate.

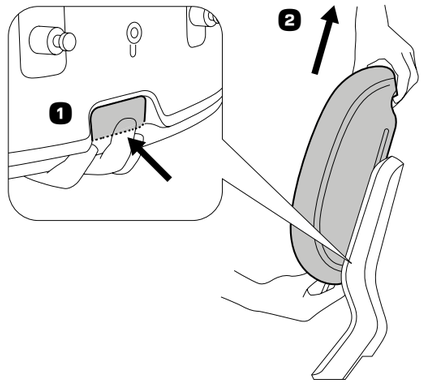

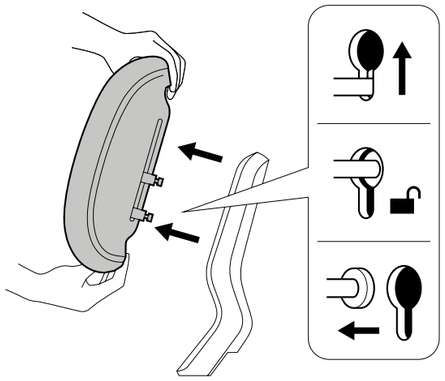

3. Select the desired height setting and align the 4 metal fixing posts with the corresponding holes on the mounting plate.

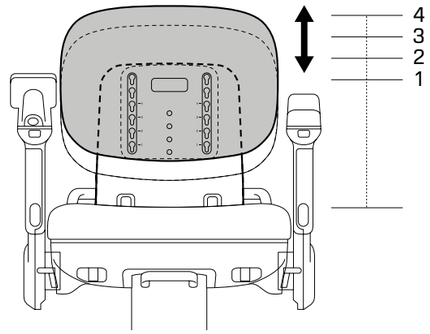

Specifications

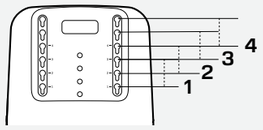

Level	Back Support Height	
1	13.8 in	350 mm
2	14.8 in	375 mm
3	15.7 in	400 mm
4	16.7 in	425 mm

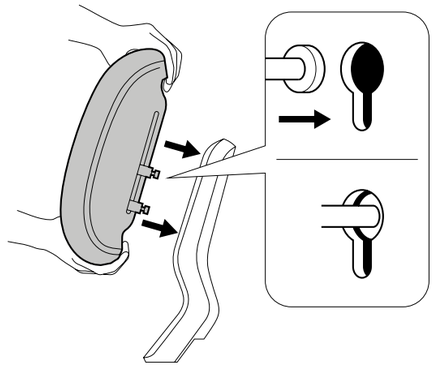

4. Press the backrest straight down until you hear a "click", which indicates that it is locked.
5. Verify that the backrest is securely installed.

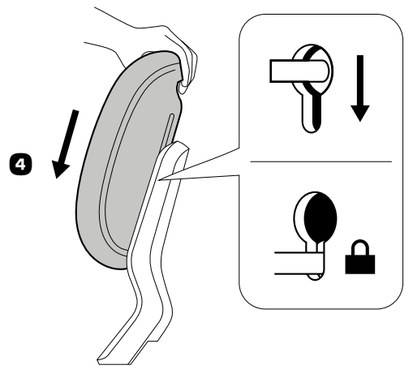

Caution

- Ensure that the device is parked stably before operation.
- Ensure that the fixing posts and holes are fully aligned during installation.
- Reinstall if no locking sound is heard.

- **Backrest angle adjustment**

The backrest angle features three settings (13°, 16°, and 19°) for individual comfort and support preferences.

Required Tools:

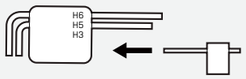

❶ **H5 Tool**
❷ **H3 Tool**

❶ Use the H3 tool to remove the backrest tilt adjustment covers from both sides.

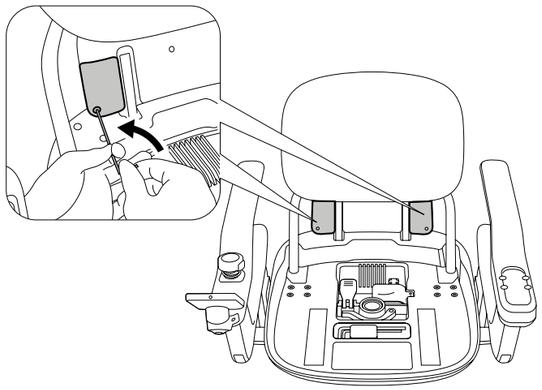

❷ Use the H5 Hex Screwdriver to loosen and take out the fixing screws on both sides.

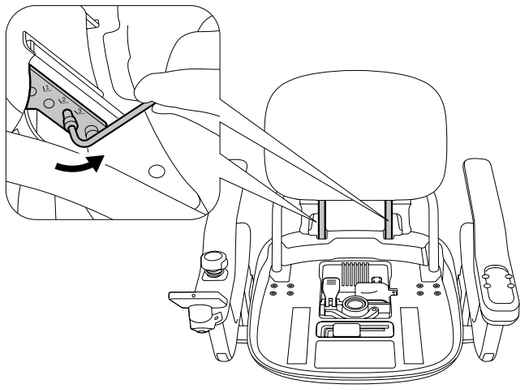

❸ Tilt the backrest forward or backward to the desired angle.

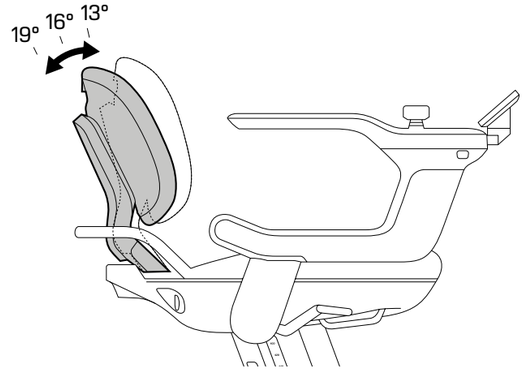

❹ Align the screws with the corresponding holes and tighten them securely using the H5 tool.

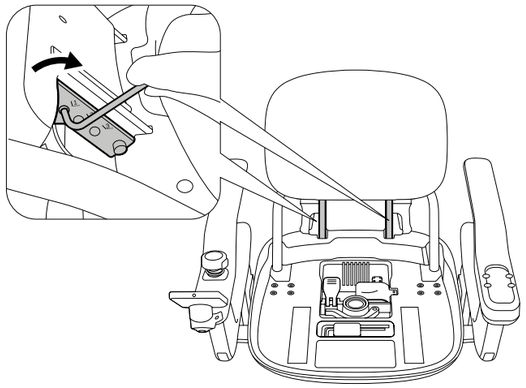

❺ Reinstall the covers using the H3 tool.

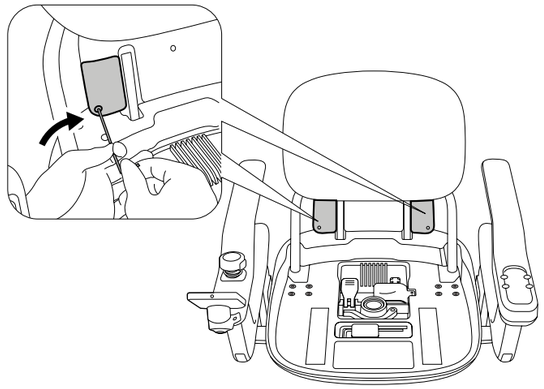

⚠ Caution

- **Safety Notice:** Ensure that the device is in a stable state before adjustments. Exercise caution with internal wiring to prevent damage.
- **Screw Fastening:** Ensure that all screws are fully tightened to prevent the backrest angle from shifting during use.
- **Function Verification:** After adjustment, lean firmly against the backrest to verify that it is stable, without shaking or abnormal noise.
- If adjustment is difficult or cannot be completed, please contact your local dealer or customer service.

4.3.3 Seat Width and Armrest Height Adjustment

Required Tools:

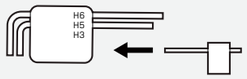

❶ H5 Tool ❷ H6 Tool

⚠ Caution

- Be sure to turn off the device power before operation.
- Control cables run inside the armrest; so hold the armrest securely throughout disassembly.
- Make sure the internal cables are clear of pinch points during installation.
- If you cannot complete it on your own, please seek professional assistance.

- **Seat width adjustment**

❶ **Remove the Seat Cushion to access the fixing screws.**

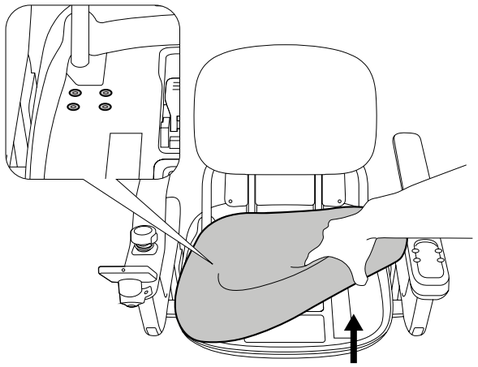

❷ **Handle one side of the armrest first:**

a. Hold the armrest firmly and use the H5 tool to remove the 4 fixing screws.

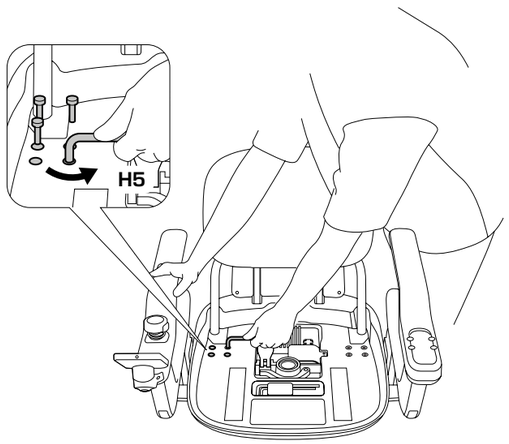

b. Move the armrest horizontally to the desired width position.

ⓘ Specifications

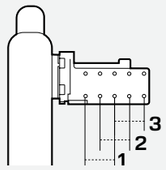

Level	Seat Width	
1	17.4 in	442 mm
2	18.9 in	480 mm
3	20.4 in	518 mm

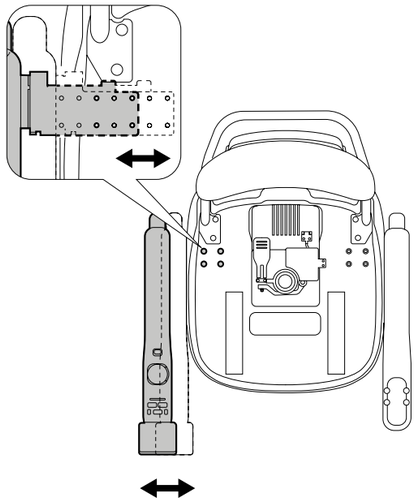

c. Align the screw holes and securely tighten the screws using the H5 tool.

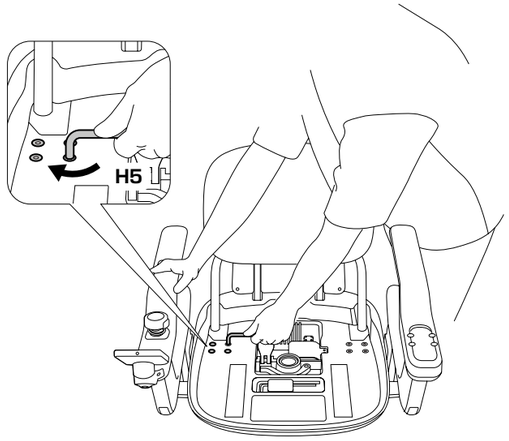

❸ **Repeat the process for the opposite armrest.**

❹ **Verify that both armrests are set symmetrically.**

- **Armrest height adjustment**

❶ Manually remove the armrest hinge cover.

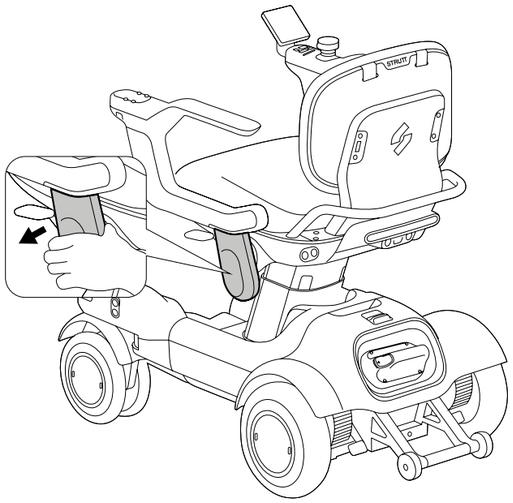

❷ Hold the armrest firmly and remove the 2 fixing screws.

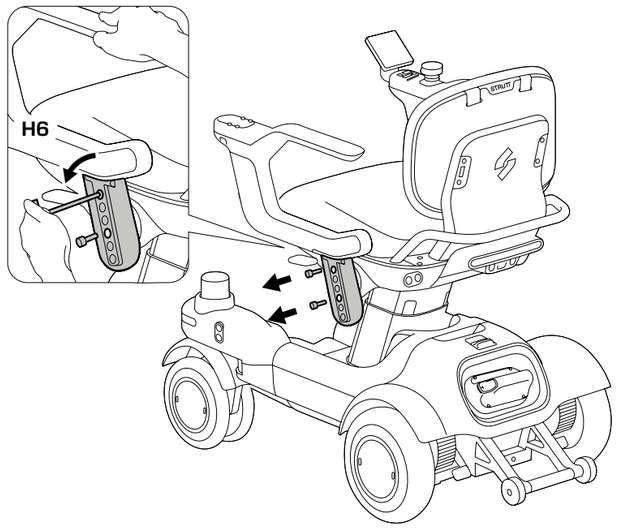

❸ Adjust the armrest up or down to the desired height position.

Specifications

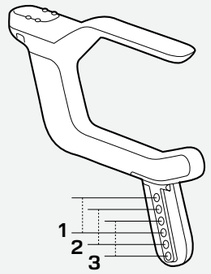

Level	Armrest Height	
1	8.7 in	220 mm
2	9.4 in	240 mm
3	10.2 in	260 mm

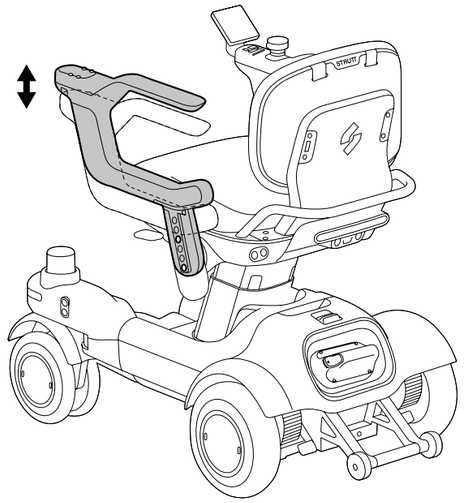

❹ Tighten the two fixing screws once the desired height is selected.

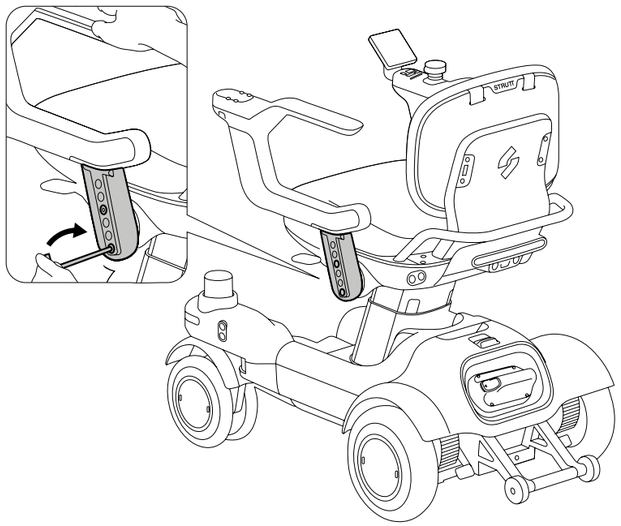

5. Reinstall the hinge cover back in place.

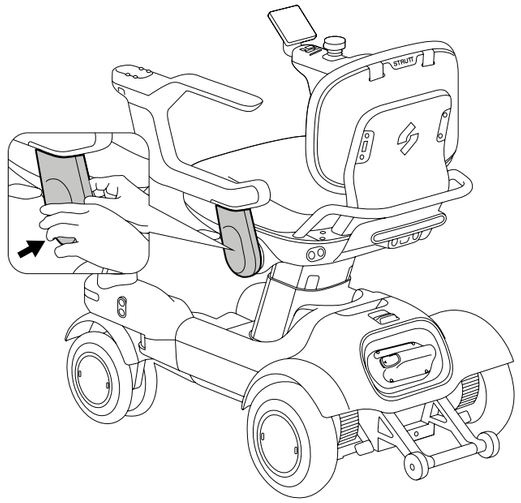

6. Repeat the process for the opposite armrest.

Caution

- **Safety Notice:** Ensure that the device is powered off and in a stable state before adjustments.
- **Internal Wiring:** The armrest must be held firmly throughout the screw removal to prevent it from falling suddenly due to gravity, causing the internal cables to be pulled or damaged.
- **Symmetrical Adjustment:** It is recommended to adjust both armrests to the same height to ensure comfort and balance during use.
- **Fastening Check:** Ensure that the screws are fully tightened to prevent armrest shaking, detaching, or abnormal noise caused by loose armrest screws during use.

4.4 How to Disassemble

Before performing any disassembly on the device, please follow these basic principles to ensure personal safety and avoid device damage.

Warning

- **Power Management:** Power off the device completely and disconnect all power cables from both the device and the power outlet before disassembly.
- **Stable Placement:** Park the device on a flat, level surface and ensure that the parking brake is engaged.
- **Component Protection:** During disassembly, please be gentle and avoid using brute force. Properly place disassembled parts to prevent them from falling or bumping.

4.4.1 Battery Disassembly

❶ Safety preparation

a. Long press the power button to turn off the device.

b. Ensure that the device is parked on a stable surface.

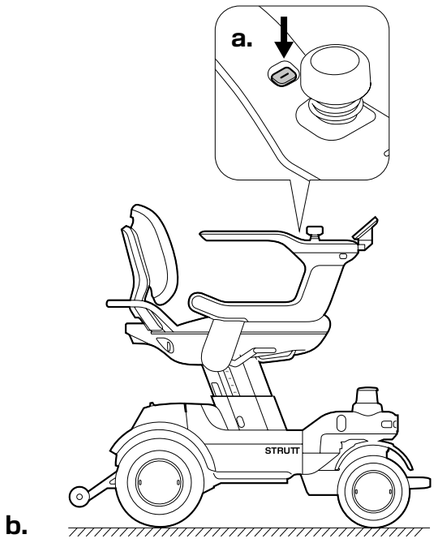

❷ Remove the battery

a. Locate the battery unlock switch on the battery compartment.

b. Press the unlock switch.

c. Lift the battery steadily from the battery compartment.

d. Place the battery in a stable, dry, and cool location.

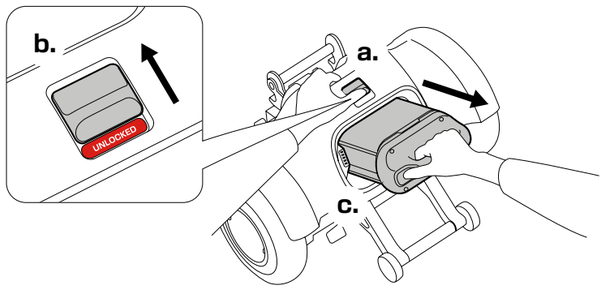

Warning

- Make sure the device is powered off before removing the battery. It is crucial to always power off the device before removing the battery.

4.4.2 Seat Disassembly

❶ Remove the Seat Cushion

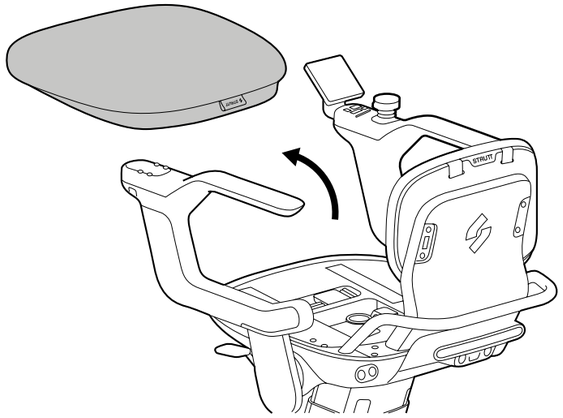

❷ Unlock the Seat

a. Locate the seat release lever at the bottom of the Seat.

b. Lift the lever into the "Unlock" position.

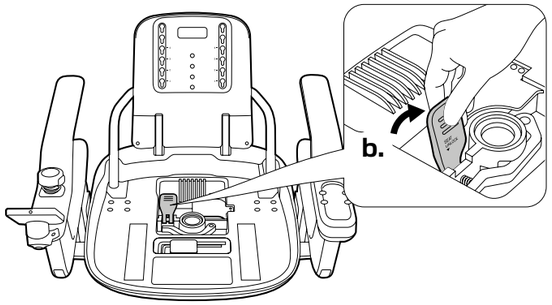

❸ Install Screen and Sensor Covers

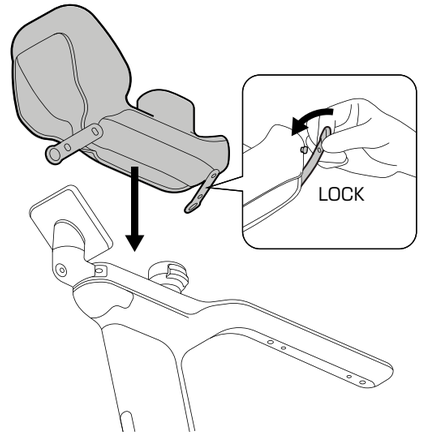

❹ Remove the Seat

a. Lift footrest.

b. Lift the Seat vertically and steadily using both hands.

c. Completely detach the seat from the seatpost on the Main Support.

⚠ Caution

- Always use both hands to maintain stability during disassembly.

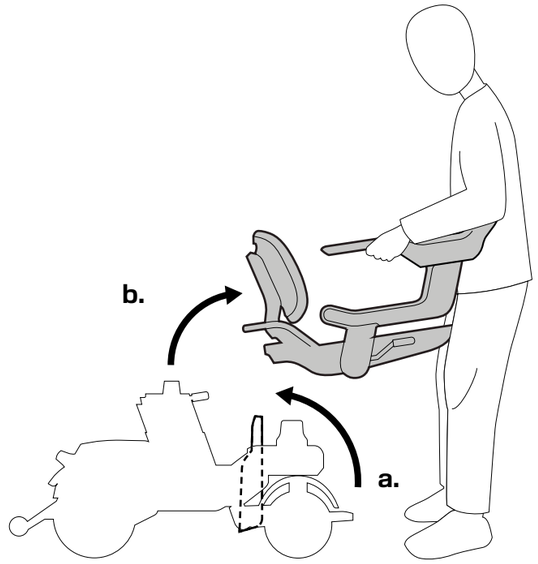

4.4.3 Detaching the Main Support from the Chassis

❶ Unlock the Main Support

- **a.** Locate the release lever on the Main Support.
- **b.** Lift the release lever upward to unlock the Main Support from the chassis.

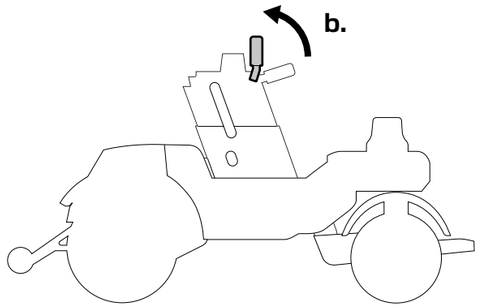

❷ Separate the Main Support

- **a.** Hold the Main Support release lever with one hand and lift the footrest with the other hand.
- **b.** Tilt the footrest side up to approximately 30 degrees to disengage the Main Support's front connection from the chassis slot.

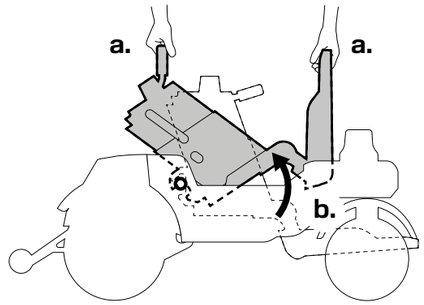

- **c.** Maintaining this angle, lift the Main Support vertically until it is fully detached from the chassis.

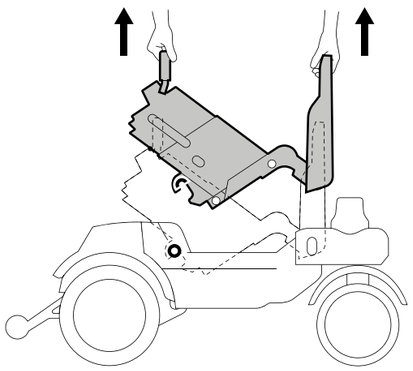

4.4.4 Chassis Separation

❶ Preparation

- **a.** Confirm that the chassis assembly is in a stable state.
- **b.** Wearing protective gloves is recommended.

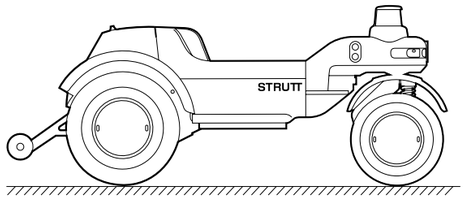

❷ Separate the Front and Rear Chassis

- **a.** Hold the front chassis firmly with both hands.
- **b.** Apply vertical upward force to separate the front and rear chassis connecting latches until the front and rear chassis are completely separated.

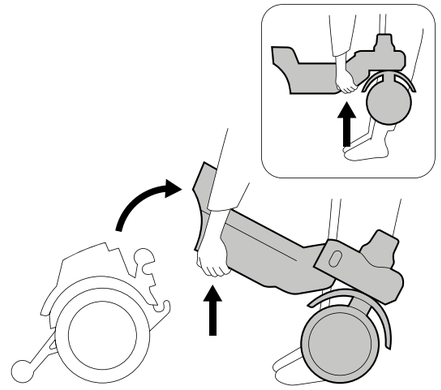

⚠ Caution

- **Transport Securing Requirements:** If disassembly is for vehicle transport, you must ensure that:
  - All disassembled parts are fully secured in the vehicle to prevent movement and collision during transport.
  - Use cushioning materials between parts to avoid direct contact.
  - Install Sensor Cover and Screen Cover.
  - Pay attention to the protruding metal parts on the bottom of the seat and place and fix them correctly to avoid damaging the vehicle.
- Do not attempt any disassembly operations not explicitly guided in this manual.

5. Preparation for Operation

Things to avoid

- **Child safety:** Do not allow children to insert fingers, limbs, or any body parts into any gaps, moving parts, or openings of the device (e.g., between the wheels and frame, seat adjustment mechanisms, or near charging ports). These parts pose a risk of squeezing, shearing, or pinching.
- If a child is riding the device (subject to local regulations and weight limits):
  - He/She must be supervised by a competent adult at all times.
  - The supervisor must ensure that the child is seated securely and prevent them from touching the hazardous gaps, openings, and moving parts mentioned above.
  - Do not leave the children alone on the device or let them operate the device alone.
- **Caution:** Because the intelligent driver assistance system has inherent limits in detecting small moving targets (such as children's hands and feet) and cannot be 100% reliable, supervisors must remain alert and take direct responsibility for the rider's safety. Never lower your guard just because the device features sensor capabilities.

Warning

- **Prohibited operations**
  - Do not sit on the Screen, invert the disassembled Seat, or apply excessive loads to the Screen.
  - Do not press the Screen forcefully or use sharp objects to operate control components.
  - Risk Notice: Such actions may damage precision control components, resulting in a total loss of control and posing severe safety risks.

Waterproof description

- The waterproof rating of this product is IPX5, which can protect against continuous low-pressure water spray, but it is not completely waterproof.
- **Recommendation:** Avoid using the device in rain or snow to prevent water ingress and device malfunction.

5.1 Inspection before Riding the Device

To ensure your safety, please perform the following inspection before each use of the device.

- Conduct the inspection on a flat, open surface.
- Ensure that there is enough safe space around the device.

5.1.1 Powered-Off Inspection

- **Structural integrity check**
  - All parts are correctly assembled, with no missing, broken, or damaged components.
  - All connections are secure and firm.
  - The seat release lever is in the locked state.
- **Mechanical function check**
  - The control joystick operates smoothly without sticking.
  - Rear wheel brakes can be released and locked normally.
  - After the brake lever is released, the device can be pushed.
  - After the brake lever is locked, the device cannot be pushed.
  - All buttons are normal, with clear audible and tactile feedback.
- **Tire inspection**
  - Front and rear wheels have no visible deformation or cracks.

5.1.2 Powered-On Inspection

- **Electronic system check**
  - **Battery level:** Confirm that the battery level on the screen is sufficient.
  - **Screen:** Test all buttons to ensure that they function correctly and respond promptly.
  - **Display system:** Make sure the screen displays correctly and that no warning messages or error codes appear.
  - **Horn:** Press the horn button and confirm that the sound is loud and clear.

- **Operational Status Check**
  - **Steering System:** Move the joystick left and right to confirm smooth steering without abnormal noise.
  - **Intelligent Driving:** Activate intelligent driving functions such as Co-Pilot and make sure the system starts normally.
  - **Perception System:** Confirm that the Live View Panel displays correctly without significant data gaps or abnormal point clouds.

Warning

- If any improper assembly, missing parts, or damage is found, please stop use immediately.
- The device brakes must be in the locked state throughout the inspection process.
- If any risk of injury or accident is found during the inspection, please contact your local dealer or customer service immediately.

Caution

- Do not step on the anti-tip bar.
- Any deformation of the anti-tip bar will compromise its protective function.
- If the anti-tip bar is deformed, contact customer service for an immediate replacement.
- All items normal: Safe to use the device.
- Any item abnormal: Stop use immediately and contact your local dealer or customer service.

5.2 Riding the Device

Read and fully understand this manual before operating the device. Proper use is essential to ensure safety.

Safe Operating Guidelines

- **Power management**
  Operation: Completely turn the power off before getting on or off the device.
  Risk Notice: Avoid accidental contact with the controller to prevent sudden movement and potential falls.

- **Braking system**
  Operation: Confirm that the parking brake is in the locked state before riding the device.
  Risk Notice: Unlocked brakes may result in unintended movement or tipping of the device.

- **Occupant protection**
  Operation: The seat belt must be fastened when riding.
  Risk Notice: Failure to use a seat belt may cause the occupant to fall out during use.
  Special Note: If the device is not equipped with a seat belt, please contact your local dealer immediately.

- **Load capacity**
  Technical Parameter: Maximum load 350 lbs (approx. 160 kg).
  Operation: Do not exceed the maximum weight capacity.
  Risk Notice: Overloading may damage the device structure and electronic system, leading to accidents.

- **Flame retardant safety**
  Operation: If a third-party cushion is used, verify that it meets flame-retardancy standards.
  Risk Notice: Ensure the device is flame-retardant in case of fire.

Things to avoid

- **Control system protection**
  Forbidden action: Do not lean your body weight on the Screen or joystick.
  Risk consequence: This may cause damage to control components, making the device completely out of control.

- **Footrest usage guidelines**
  Forbidden Action: Do not jump on the footrest or place heavy objects on it.
  Risk Consequence: This may cause the rear wheels to lift, resulting in the device tipping forward.

Caution

- **Moving parts safety**
  Operation: Keep hands and feet away from all moving parts.
  Risk Notice: There is a danger of being caught or pinched.
- **Operating environment requirements**
  Operation: After each adjustment of settings, always start the device in a safe, open space.
  Risk Notice: Avoid accidental device movement that could result in collisions with obstacles.
- **Component maintenance**
  Operation: The backrest is detachable; handle with care during transport or handling.
  Risk Notice: Improper handling may cause components to detach, leading to injury.
- **Accessory replacement**
  Operation: Consult a professional before replacing key accessories.
  Risk Notice: Ensure accessory compatibility to avoid safety hazards.

5.2.1 Transfer from the Front

Warning

- **Pinch hazard prevention**
  When getting on or off the device, always keep your fingers, hands, and other body parts away from the following hazardous areas:
  - Moving Parts of the Footrest Pivot
  - Seat Adjustment Mechanism Gaps
  - Other Moving Parts and Connection Gaps
- **Device operating guidelines**
  Please strictly follow the operation guide in this manual; it is forbidden to grip, lean on, or press parts not specified in the manual. Irregular operation may cause device damage or injury.

- **Standard riding procedure**

❶ Safety preparation

a. Power management
Confirm that the device power is completely turned off.

b. Braking safety
Ensure the brake release levers on both sides are locked to prevent the equipment from moving.

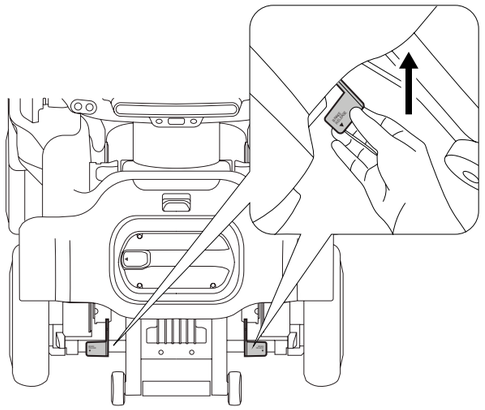

❷ Footrest preparation

a. Grip the designated footrest lifting handle.
b. Flip the footrest upward steadily to the working position.

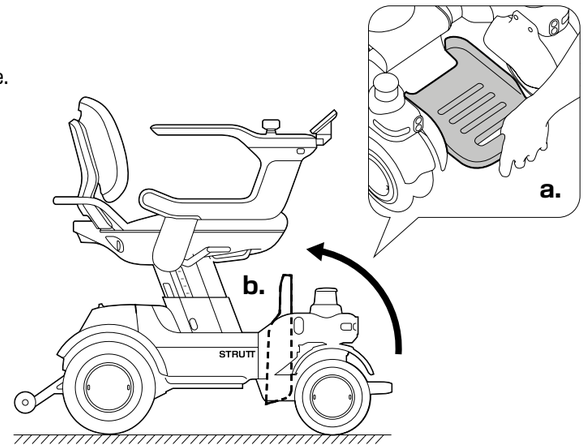

❸ Safe seating

a. Back up until the seat contacts your legs. Support yourself by holding the angled section of armrest.

b. Lower yourself into the seat steadily.

⚠ Safe seating guide

- **Support Restrictions:** Do not use the Screen or joystick as a support point for your body weight.
- **Backrest Use:** Do not use the backrest as support during transfer.
- **Risk Notice:** The backrest is not rigidly locked; upward force may cause accidental loosening, posing a risk of falling.

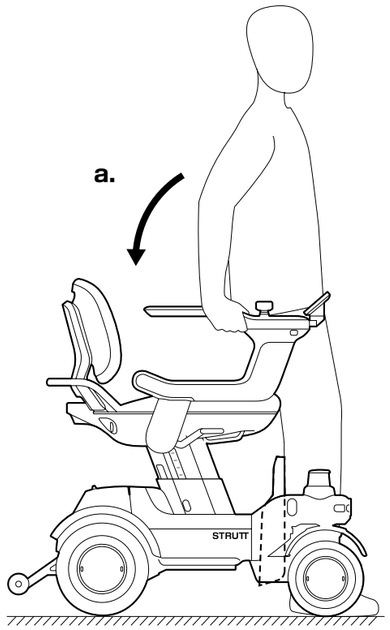

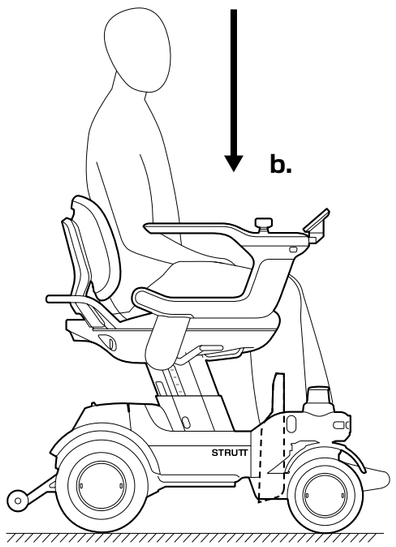

❹ Restore preparation status

a. Lower the footrest steadily to the horizontal driving position.

b. Ensure that both feet are placed firmly on the footrest.

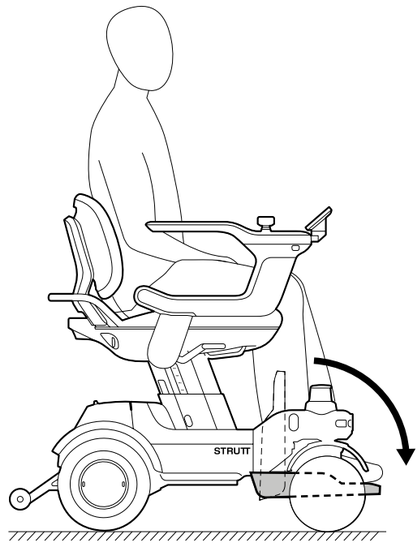

5.2.2 Transfer from the Side

Warning

- **Pinch Hazard:** Keep fingers and all body parts clear of connection points and moving components during transfer to avoid serious crush injury.

- **Operating steps**

❶ Safety preparation

Ensure that the device is fully powered off.

❷ Lift the armrest

a. Locate and push down the armrest release lever.

b. Lift the armrest up and rotate it backward until it is completely out of the side entry/exit area.

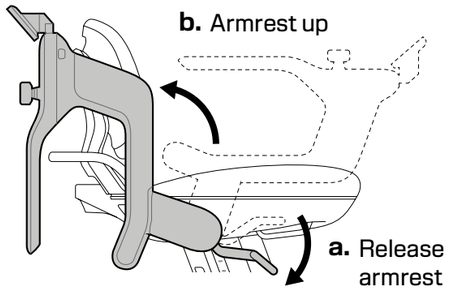

❸ Perform the transfer

Carefully and steadily transfer onto the Seat Cushion from the side.

Caution

- **Support Restrictions:** Do not use the Screen or joystick to support your body weight during transfer.
- **Backrest Use:** Do not lift the back support during transfer. The backrest is not rigidly fixed, and applying upward force may cause it to loosen, creating a risk of falling.

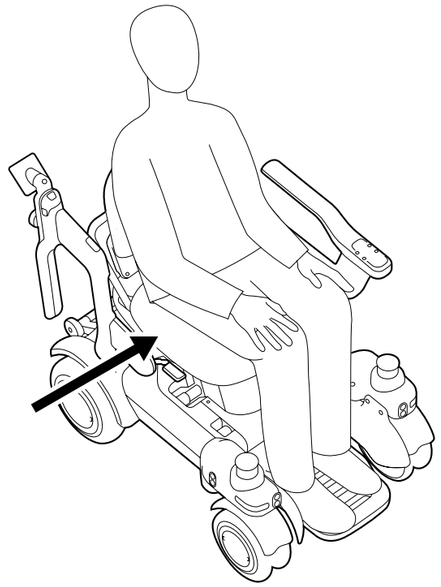

❹ Reset and confirm locking

a. Rotate the armrest forward to return it to the original position.

b. An audible "click" is heard, indicating that the locking mechanism is fully engaged.

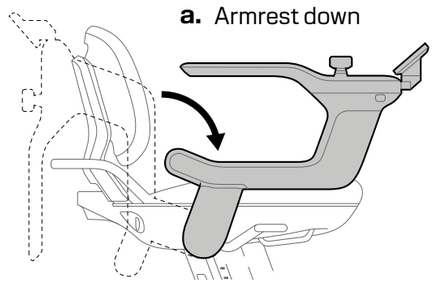

5.3 Seat Belt Instructions

Warning

- For your safety, always keep your seat belt fastened while operating the device.
- Ensure that the seat belt shows no signs of twisting, fraying, or damage. If any issues are found, stop use immediately and contact your local dealer or customer service.

5.3.1 Fasten the Seat Belt

1. Insert the seat belt tongue into the buckle until a "click" is heard.

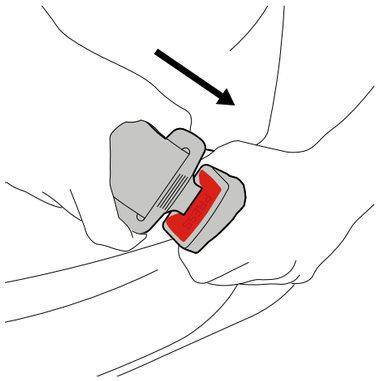

2. Adjust the seat belt so it fits snugly without being too tight to ensure that the body is safely fixed.

5.3.2 Unfasten the Seat Belt

1. Press the release button on the buckle.

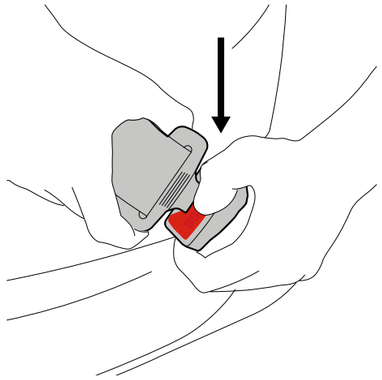

2. Remove the tongue from the buckle to unfasten the seat belt.

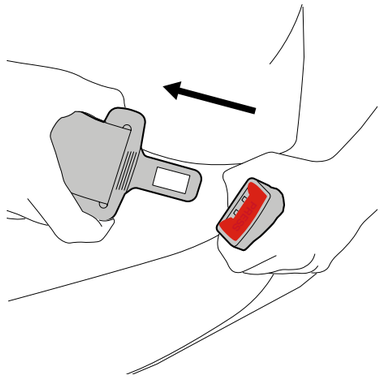

Caution

- **Regular Inspection:** Check for seat belt wear every month to ensure that the buckle function is normal.
- **No Modifications:** Unauthorized disassembly or modification of the seat belt system is strictly prohibited.

5.4 Powering On

Key steps

Operation: Before powering on, verify that the parking brake is engaged and locked.
Risk Notice: If the brake is not locked, the device may move unexpectedly after power-on, leading to device tipping or collision accidents.

Things to avoid

Action: Do not press the power switch forcefully or use sharp objects to operate the Screen.
Risk Notice: Improper operation may damage precision control components, causing the device to completely fail to operate normally.

❶ Safety preparation

a. Confirm that the device is parked on a flat, stable surface.
b. Verify that the parking brakes on both sides are securely locked.
c. Ensure that there is enough safe space around.

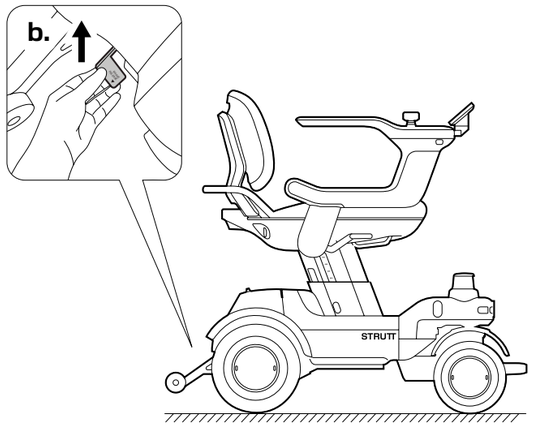

❷ Powering on

a. Press and hold the power button on the Screen to start the device.
b. Verify that the Screen display initializes correctly.
c. Wait for the system self-check to complete.

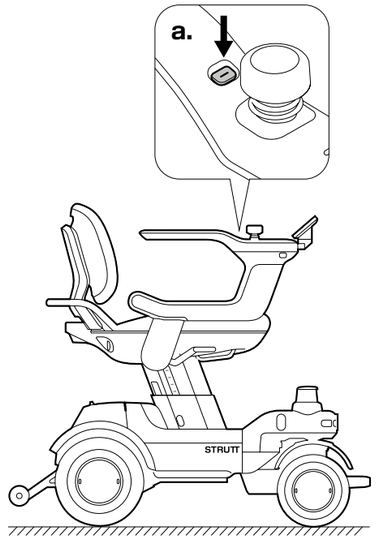

5.4.1 Registration and Activation

Before using this device, install the Strutt app, register an account, and complete the device pairing and activation process. Until this process is complete, only basic manual mode will be available. Advanced smart features will remain disabled.

❶ App download

- **iOS:** Search for "STRUTT" in the App Store
- **Android:** Search for "STRUTT" in Google Play
- **QR Code:** Scan the QR code on the device screen to navigate directly to the download page

❷ System requirements

- **iOS**
  - **Version:** iOS 15.0 or later
  - **Compatibility:** iPhone, iPad
- **Android**
  - **Version:** Android 10.0 **or later**
  - **Disclaimer: Variations in Android software across different manufacturers may** cause performance inconsistencies for certain features on specific brands or models

Caution

- **Secure Download:** Always download the app from the official platforms listed above
- **Risk Prevention:** Avoid using third-party apps from unknown sources to prevent security threats and data breaches

❸ Preparation before connection

- Ensure that Bluetooth is enabled on your mobile device
- Ensure a stable Internet connection (Wi-Fi or cellular network)
- Keep the device powered on

Note

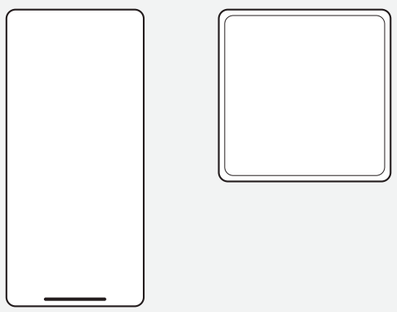

- Step illustrations for phone operations are rectangular, and those for vehicle-screen operations are square.

❹ Account registration

a. Tap "Register via Email".

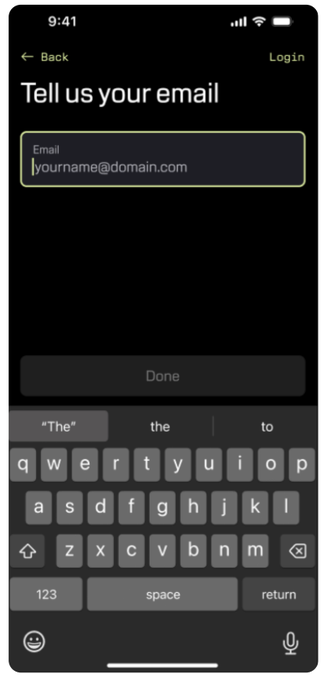

b. Enter a valid email address.
c. Tap "Done".

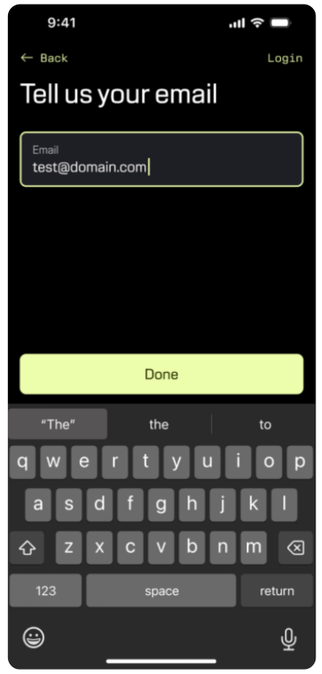

d. Check your inbox for the verification code.

e. Return to the APP and enter the code.

f. Tap "Done" to proceed.

g. After verification, complete your personal profile as prompted:

- Enter your nickname.
- Set your password.
- Confirm all information is correct and tap "Complete Registration".

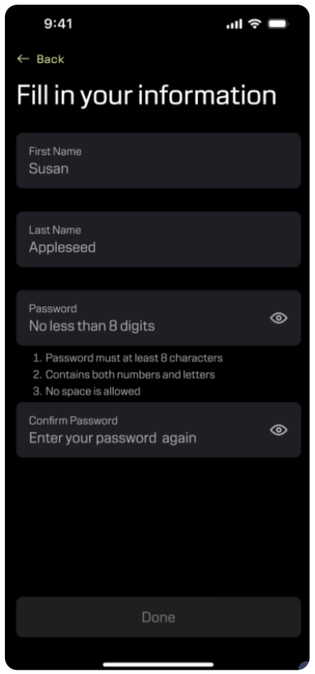

h. Once your account is successfully created, you will be automatically logged into the Strutt app and can proceed to device pairing and activation.

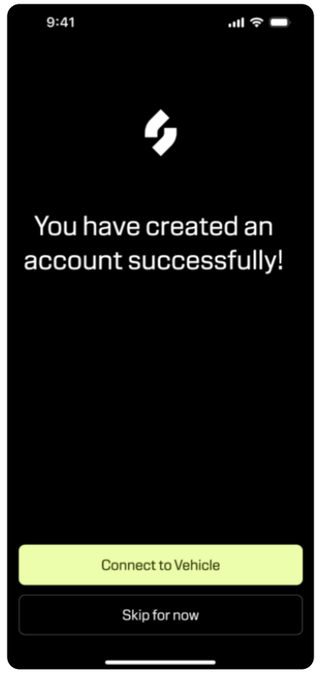

❺ Pairing and activation

- Ensure Bluetooth is enabled on your mobile device
- Keep the Strutt APP running and active
- Ensure a stable Wi-Fi network is available

a. Power on the device

- Press and hold the power button.
- Monitor the startup process.
- The daytime running lights and tail lights illuminate normally.
- The Strutt logo appears on the screen.

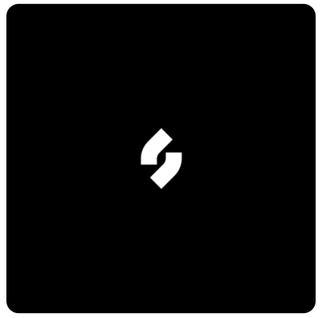

- The "Choose your Language" screen appears once the startup is complete.
- Select your language and tap "Confirm" to open the activation code page.

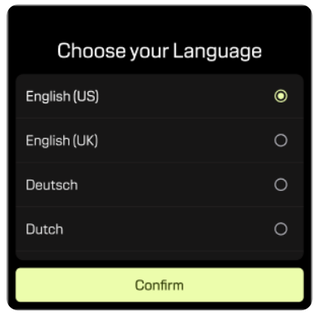

- The activation code for pairing with the phone is displayed.

b. Initiate the pairing and activation process

- Open the Strutt APP and navigate to the Home page.
- Tap "Add Vehicle".

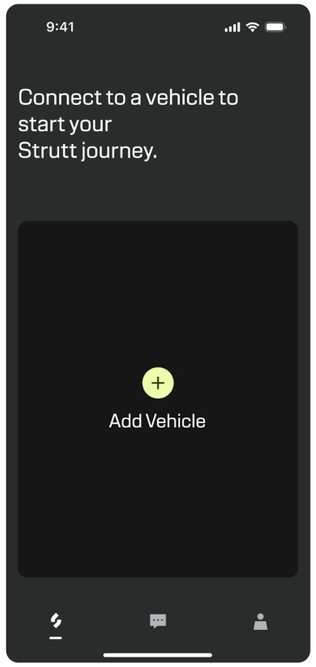

- Tap "Pair My Vehicle" to start the pairing.

c. Grant permissions

- The system will request Bluetooth and camera permissions.
- Tap "Allow" or "Confirm" to grant access.
- Ensure that all permissions are granted to proceed.

d. Scan the QR code

- Use your phone to scan the QR code on the device screen.

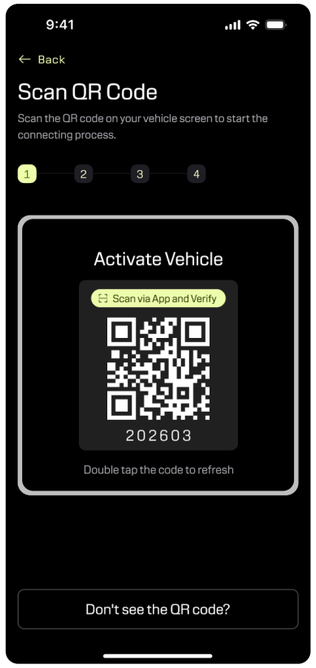

- The app will automatically navigate to the Confirm Vehicle screen.
- Carefully verify the displayed device name and serial number.
- Tap "Confirm" once verified.

e. Sign the disclaimer

- Select your language and tap "Confirm" to open the disclaimer page.

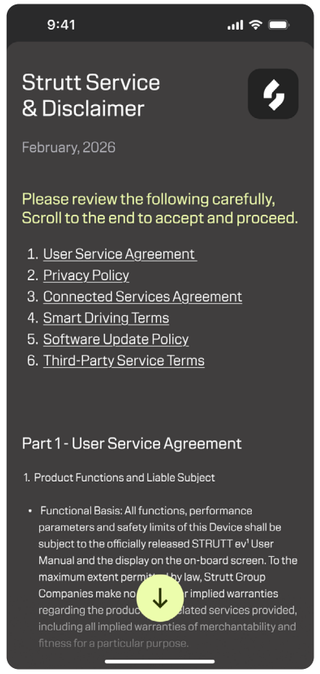

- After reviewing and accepting all terms, tap "I Agree to All".
- The activation guide will appear.

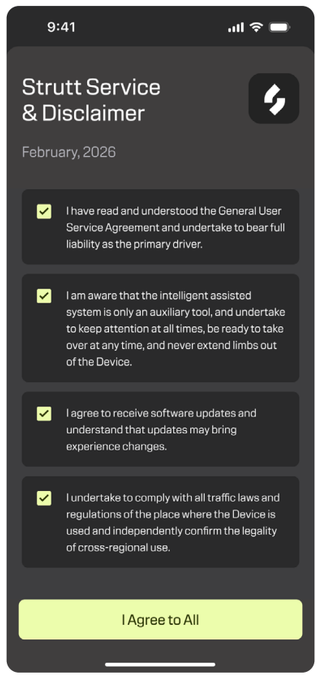

f. Start connecting.

g. Connect to the network

- Choose an available Wi-Fi network to connect.
- If no network is available, tap "Skip" in the top-right corner.

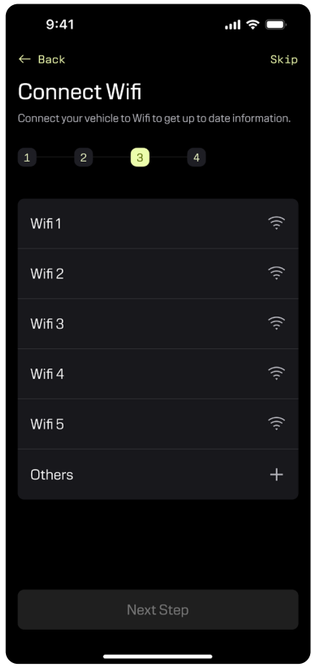

h. Set up services

- Enable the following services as needed:
- **Enable Location:** Track the device's location in real time.
- **Enable Notification:** Receive device status updates.
- Alternatively, tap "Skip" to complete basic pairing.

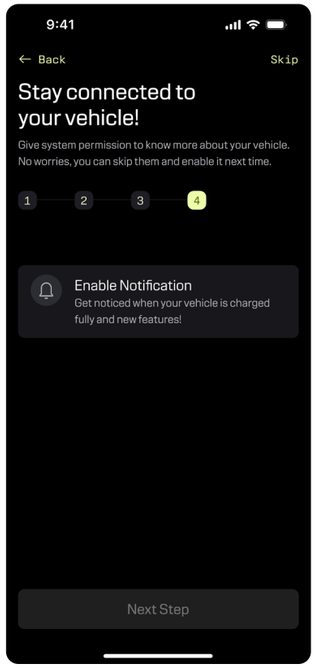

i. Complete the activation process

- Tap "Done" to enter the device management screen.
- The device home screen will be displayed.
- The pairing and activation process is complete.

⚠ Caution

- **Permission Requirements:** You must grant all requested permissions to complete the pairing process
- **Information Verification:** Carefully verify the device serial number to ensure you are pairing the correct device

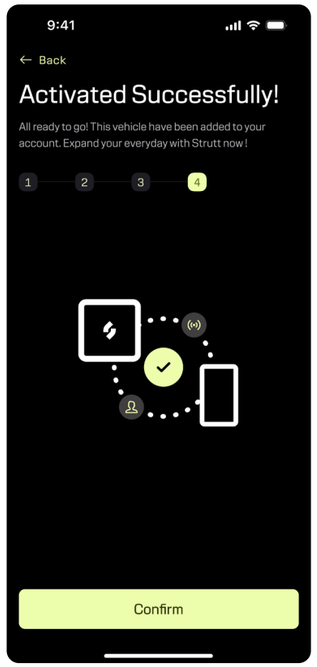

5.4.2 Speed Adjustment

❶ Speed level adjustment

- **a.** Use the speed selection buttons to adjust the speed levels.
- **b.** **Range:** Levels 1 to S (5 levels total). S mode is only accessible once the seat belt is fastened.
- **c.** **+ Button:** Increase speed level
- **d.** **- Button:** Decrease speed level

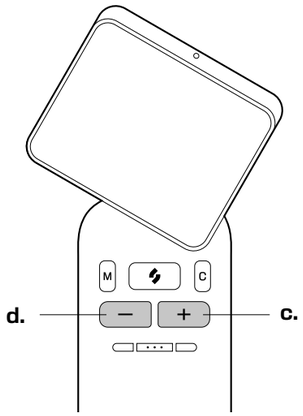

❷ Real-time speed control

- **a.** Driving speed adjusts in real time based on how far the joystick is pushed.
- **b.** The farther the joystick is pushed, the more the device accelerates.

⚠ Caution

- **Regulatory Compliance:** Maximum speed limits may vary according to local regulations in different countries or regions.
- **Environmental Adaptation:** Select an appropriate driving speed based on current road and environmental conditions.
- **Gradual Progress:** New users are advised to start at lower speed levels to gradually adapt to device performance.

5.4.3 Switching Driving Modes

The device offers three core driving modes accessible via three dedicated buttons on the Screen, providing intuitive and convenient operation.

⚠ Caution

- Before switching modes, please ensure that the device is in a safe state.
- Since functionality, performance, and user responsibilities vary by mode, please refer to and understand the corresponding sections.

❶ M button (left)

Press once to enter Manual Driving Mode (M).

❷ C button (right)

Press once to enter Assisted Driving Mode (Co-Pilot). Press and hold to enter Advanced Assisted Driving Mode (Co-Pilot+).

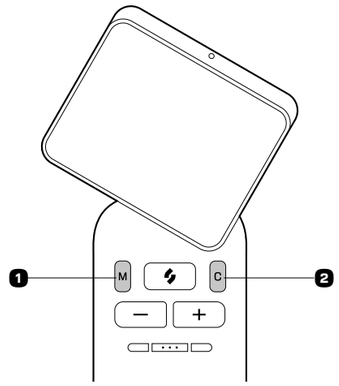

5.4.4 Using the Horn

The Fn button defaults to the horn function. Pressing the Fn button sounds the horn to alert nearby pedestrians or other road users, improving operational safety.

Caution

- **Proper Use:** Use the horn moderately when necessary, and avoid using it in no-honking zones or during quiet hours at night.
- **Etiquette:** Do not use the horn excessively or maliciously to avoid creating noise or disturbing others.
- **Safety Check:** Make sure the horn is working properly and can be heard clearly before use.
- The horn is an important safety device. Test it regularly to ensure proper operation. If the horn malfunctions, contact an authorized dealer or customer service for inspection and repair.

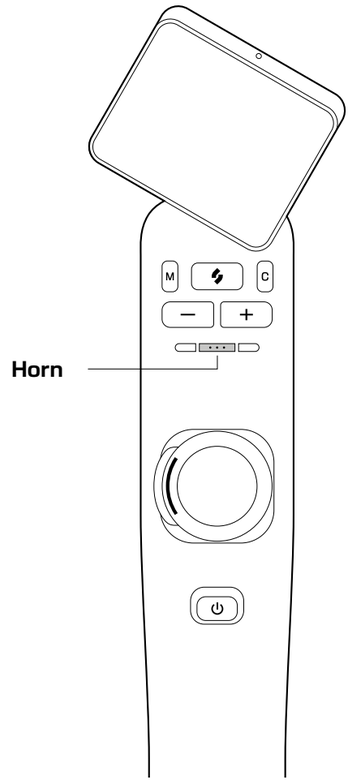

5.5 Touchscreen Display Interface

The device features an intuitive touchscreen interface with the following key functions:

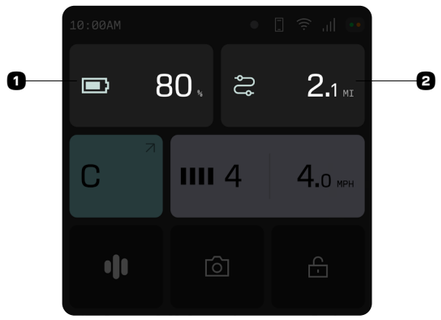

❶ Battery status

Displays the current battery charge level.

❷ Odometer

Press once to enter Assisted Driving Mode (Co-Pilot). Press and hold to enter Advanced Assisted Driving Mode (Co-Pilot+).

❸ Occupancy alert

Displays "NOT IN SEAT" on the screen when the seat is unoccupied.

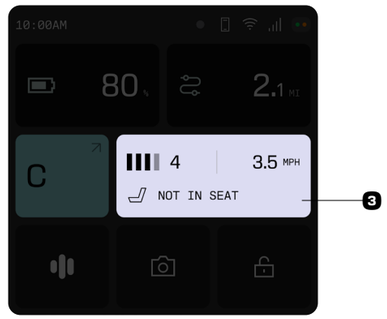

❹ Brake release alert

Displays "BRAKE RELEASED" on the screen when the brakes are disengaged.

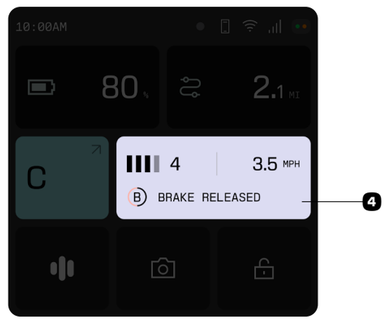

Note

- Left release
- Right release
- Both sides release

5.5.1 AI Assistant

- **Product Overview**

  The AI Voice Assistant features two core capabilities:
  - **Vehicle Control Interaction:** Use voice commands to control the device, manage waypoints, start navigation, and check vehicle status.
  - **Voice Chat:** Chat naturally with ev[1] using on-screen speech-to-text and chat history support.

- **Core Functions**

- **Voice Interaction and Text Display:** Press and hold to record, then release to send. The system provides real-time speech-to-text, voice responses, synchronized on-screen text, and chat history.

- **Vehicle Control**
  - Basic Controls: Driving mode switching, headlight toggling, joystick lock/unlock, and power off.
  - Waypoints and Maps: Create, delete, and view waypoints and maps, and navigate to waypoints using voice commands.
  - Motion Control: For example, move forward or backward 1 m, or turn left or right by 45°.
  - Status Query: Check the battery level and trip mileage.

- **Multilingual Support:** Supports Chinese, English, Spanish, French, German, Italian, and Dutch. When you change the language on the device, both text and voice update accordingly.

- **Personalized Settings:** Adjustable voice tone, speaking rate, and playback volume.

- **How to Use**

Press and hold the Voice button to start recording. Release the button to send your request. After processing, the device responds with voice feedback to complete the interaction.

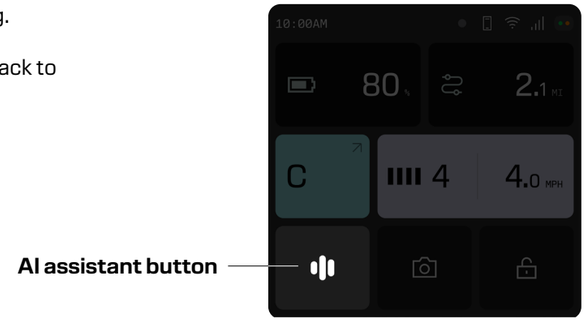

Disclaimer

- **Service Scope:** The integrated voice assistant is powered by third-party cloud providers to enable voice-controlled navigation, movement, and device settings.

- **Service Dependency:** Voice functions depend on network connectivity and the availability of third party servers. Strutt shall not be held liable for any unavailability, inaccuracy, or delayed response in voice functions caused by network fluctuations, third-party server issues, or other factors beyond our reasonable control. Such events do not affect basic driving or control functions, and Strutt assumes no liability for damages or breach of contract.

- **Privacy Notice:** Voice commands are transmitted to third-party servers for processing and analysis. Please note that this privacy policy does not apply to services provided by third-party cloud providers. You should review and understand the third-party provider's privacy policy to protect your personal information. Do not include sensitive personal information in voice commands.

5.5.2 Drop-down Menu

From any screen, swipe down from the top edge to open the Control Bar (drop-down menu). This menu provides quick access to shortcut settings and features, allowing for immediate adjustments without navigating through the full system settings.

❶ Open the Control Bar

Swipe down from the top edge of any screen.

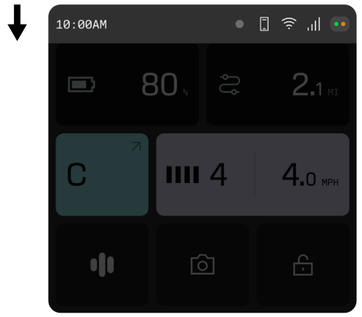

❷ Perform quick operations

In the expanded control bar, tap the icon or switch you want to use.

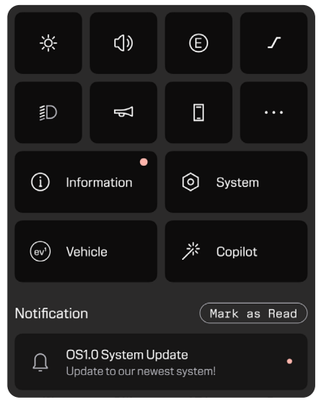

❸ Close the control bar

Tap any blank area on the screen or swipe up to close the menu.

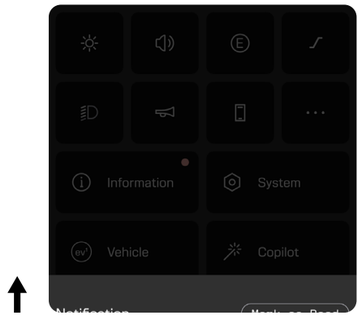

5.5.3 Control Bar

The control bar contains the following shortcut function items:

❶ Brightness
❷ Volume
❸ Range mode
❹ Push handle
❺ Headlight
❻ Horn
❼ Phone connection
❽ More functions

5.5.4 Device Information

The device information screen shows the device identity, core status, and system data. You can view key parameters, perform firmware upgrades, or upload logs to assist with diagnostics.

- **How to access**

  In the system settings menu, tap "Information".

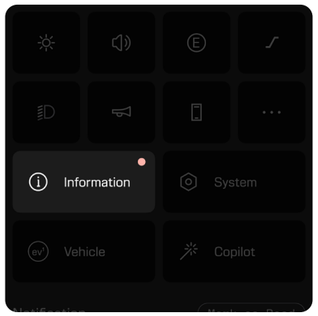

- **Interface layout**

  Includes four main information modules: "General", "Battery", "Vehicle Log", and "Module Status".

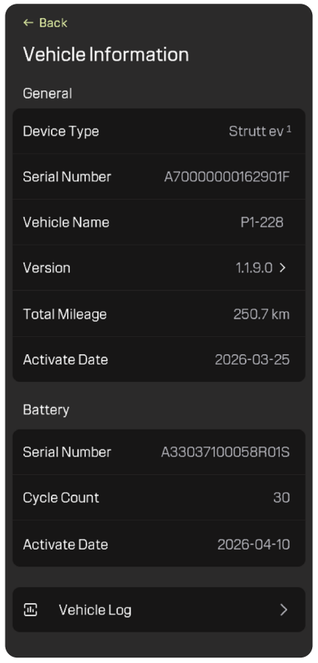

5.5.5 System Settings

The system settings screen is where you manage personalization options and network connections. You can connect mobile devices, manage network connections, select units, set the time, or restore factory settings.

- **How to access**

  On the home screen or settings menu, tap the "System" icon.

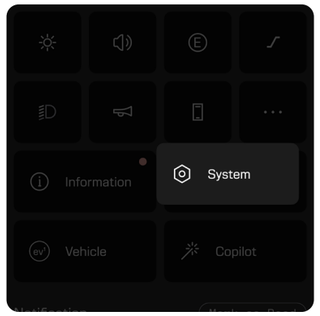

- **Interface layout**

  Access menus for "Phone Connection", "Internet", "Units & Measurements", "Time", and "Reset".

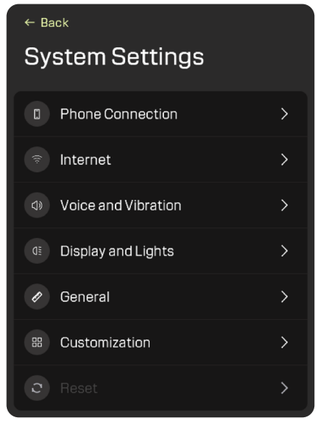

5.5.6 Notification Center

The Notification Center shows messages and reminders from the device and the Strutt system. You can view details and manage notification settings to stay informed about device status.

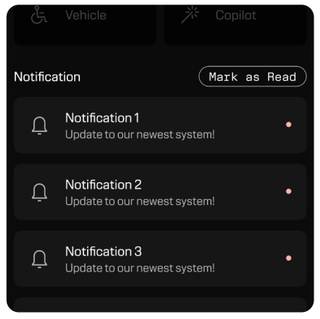

6. Driving Strutt

Read and fully understand this chapter before operating the device. Proper operation is essential for your safety and the safety of others.

Warning

Mandatory operations

- **Battery lock check**
  Operation: Confirm that the battery is fully locked in place before driving.
  Risk Notice: Unstable battery connection may cause the device to suddenly lose power and stop while driving, posing a risk of loss of control.

- **Environmental observation**
  Operation: Maintain full awareness of your surroundings. Exercise extreme caution and maintain low speeds in crowds, confined spaces, near obstacles, or on uneven terrain and slopes.
  Risk Notice: Slippery slopes can easily lead to device instability and side-slipping; extra vigilance is required.

- **Lighting use**
  Operation: Driving lights must be turned on when driving at night or in low light conditions.
  Risk Notice: Insufficient visibility will significantly increase the risk of collision.
  Charging in designated places.

- **Passing obstacles**
  Operation: When passing obstacles such as curbs and steps, you should pass slowly and carefully at a 90° right angle.
  Risk Notice: Passing diagonally may lead to device tipping or structural damage to the chassis.

- **Brake use**
  Operation: Release the brakes only on flat ground or during an emergency power-off.
  Risk Notice: After the brakes are released, the device will move freely, posing a risk of loss of control.

Things to avoid

- **Screen operation**
  Action: Do not press switches forcefully or use sharp objects to operate the Screen.
  Risk Notice: Such actions can damage precision components, resulting in total device failure.

- **Driving posture**
  Action: Do not squat, lean forward excessively, or make abrupt bodily movements while driving.
  Risk Notice: Improper posture may compromise the device's stability and balance, significantly increasing the risk of a tip-over.

- **Footrest use**
  Action: Do not operate the device without lowering the footrest or with feet off the footrest.
  Risk Notice: Feet may be caught in moving parts, causing serious injury.

- **Carrying items**
  Action: Do not operate the device while holding objects or carrying items on your lap.
  Risk Notice: Carrying items may reduce control precision and cause unintended device movement.

- **Driving through water**
  Action: Do not drive through puddles.
  Risk Notice: It may lead to circuit corrosion and short circuits, causing device damage.

- **Towing operations**
  Action: Do not use this device for towing.
  Risk Notice: There is an extremely high risk of the device flipping backward.

- **Steep slope judgment**
  Action: Stop immediately if the anti-tip bar touches the ground while climbing an incline.
  Risk Notice: It means that the slope is too steep; continuing to operate will result in a total loss of control.

6.1 Manual Driving Mode (M)

In manual driving mode (M), you have complete control over the device. The device responds directly to your control inputs and does not provide automatic steering or speed intervention. Obstacle warnings are provided only through haptic feedback.

Notes

Obstacle warning performance and safety specifications

- **Max speed for warning activation:** 6 km/h
- **Min Identifiable Obstacle Size:** 400mm*100mm*150mm (L*W*H)
- **Min Identifiable Ground Depression Size:** 400mm*100mm*150mm (L*W*H)
- **Warning Trigger Range:** When an obstacle enters the warning zone, the system generates a vibration alert. The warning distance automatically increases with vehicle speed to provide a timely warning.
- **Collision Response Mechanism:** To enhance safety, the system will stop motor operation or reduce motor power output when a collision is detected.

6.1.1 Basic Movement Control

❶ Forward

Push the control joystick forward.

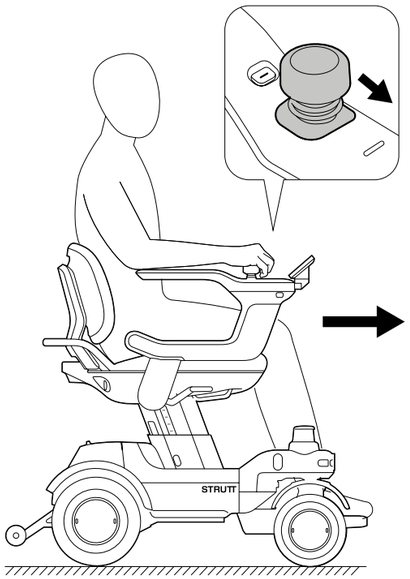

❷ Reverse

Push the control joystick backward.

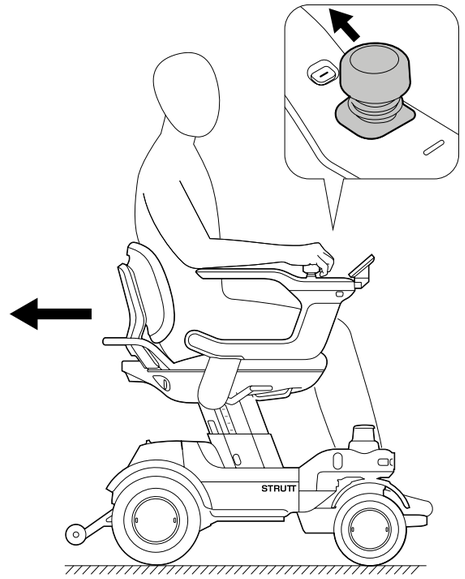

❸ Turning

Move the joystick left or right to turn the device in the desired direction.

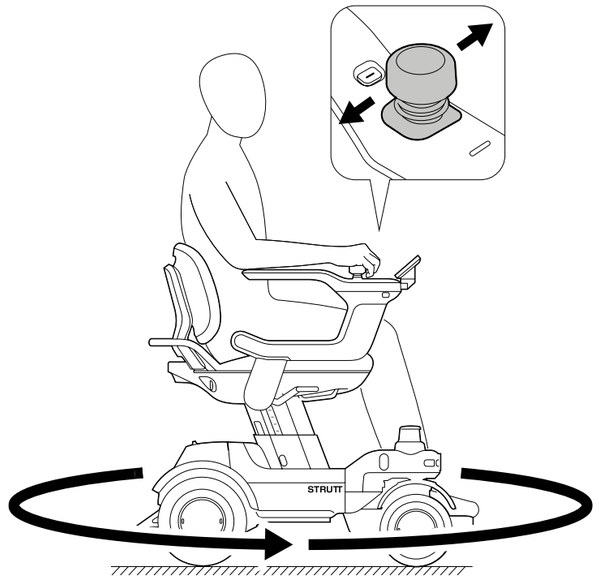

6.1.2 Speed Control

The device's speed is proportional to how far the joystick is pushed.

❶ Slight push

The device drives at low speed.

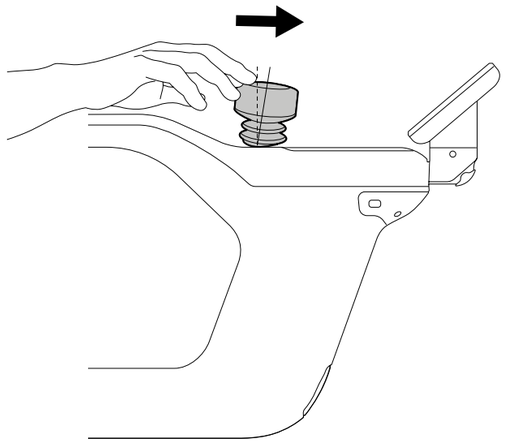

❷ Maximum push

The device accelerates to the maximum speed under the current level.

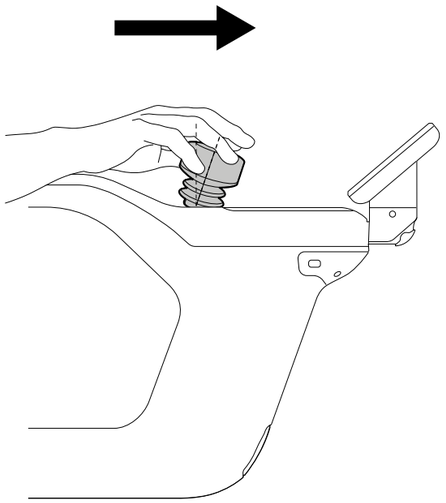

6.1.3 Braking and Stopping

Release the joystick completely to automatically engage the brakes and bring the device to a smooth stop.

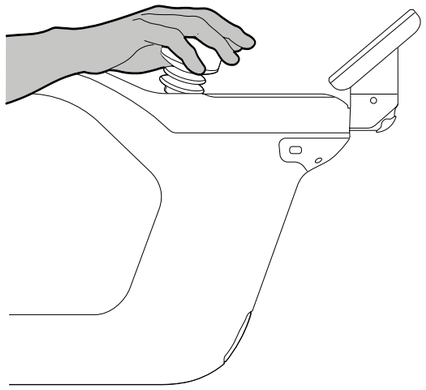

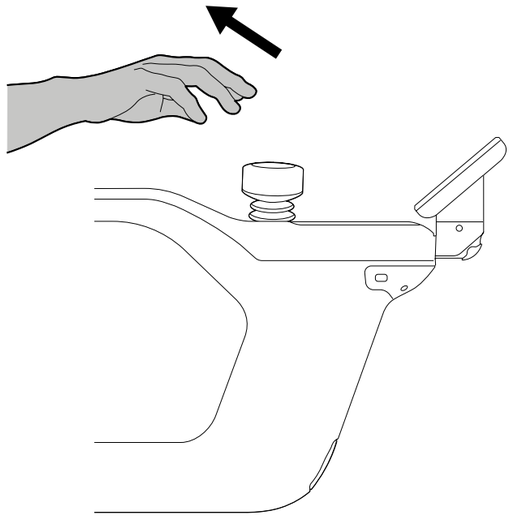

⚠ Caution

- When an obstacle is detected in the path of travel, the control joystick will issue a haptic warning through vibration.
- **Important:** This vibration is only a warning; the device will not automatically brake or steer to avoid obstacles. The operator must manually avoid all obstacles.

⚠ Warning

- **Full Control:** In this mode, you must maintain constant attention and assume full responsibility for the driving path and safety of the device.
- **Risk Anticipation:** Do not rely solely on vibration prompts; always stay aware of your surroundings to anticipate and respond to potential risks in advance.

6.1.4 Driving Stability and Limitations

This device is designed to provide stable driving on typical paved surfaces. However, its stability is subject to physical limitations under certain extreme conditions.

Warning

Actual climbing ability is restricted by ground friction, and there is a risk of losing control.

- The nominal maximum climbing ability (13°) of this device was measured under ideal laboratory conditions with sufficient static friction between the tires and the ground.
- In actual use, the slope that can be safely passed depends entirely on the real-time ground conditions.
- The following low-friction road surfaces can significantly reduce actual climbing ability and can easily cause drive wheel slipping, lateral skidding, or backward rolling, leading to serious accidents:
  - Roads that are wet, oily, or covered in loose debris (such as after watering, or with sand and fallen leaves).
  - Ice, snow, or frost-covered roads.
  - Smooth hard surfaces (such as polished marble, smooth tiles, terrazzo, or epoxy floors).
  - Worn, smooth aged asphalt or concrete surfaces.
- When operating downhill with a nearly full battery, the device may gradually slow down. Lower battery temperatures may further reduce speed. In extreme cases, drive protection may activate, causing the device to stop.

Key steps

Mandatory Safety Operating Rules

- **Assessment before Climbing:** Before attempting any slope, get off the device to inspect the surface, or approach it cautiously and assess whether it is dry, clean, and sufficiently rough.
- **No Forced Attempts:** Do not attempt to climb if the surface is known or suspected to be wet, slippery, or smooth.
- **Real-Time Judgment:** During the climbing process, if any irregular power output, wheel slipping, or any signs of skidding are detected, immediately release the joystick to stop. If safe, reverse slowly in a straight line back to level ground.
- **Route Preference:** Always prioritize paths that are dry, rough, and known to be safe. Treat any unfamiliar or questionable slope as impassable.

6.2 Assisted Driving Modes

Important Notice

All assisted driving functions described in this section can only be used after the device has been bound and activated.

This device features an advanced driver assistance system designed for the Smart Everyday Vehicle. The system uses a multi sensor fusion architecture to create a 360° perception network that helps enhance driving safety.

- **Sensor configuration**

  - LiDAR Sensors (x2)

  - TOF Sensors (x10)

  - Ultrasonic Sensors (x6)

  - Front camera (x1)

  - Rear camera (x1)

- **Functional features**
  - Through time synchronization and data fusion across sensors, static and moving obstacles are detected and identified in real time.
  - It can recognize specific targets, including human feet, pets (cats, dogs), etc.
  - The system is designed to help protect both the operator and nearby pedestrians and pets.

- **Laser safety compliance statement**

  This product complies with the following international standards:
  - IEC 60825-1:2014
  - EN 60825-1:2014/A11:2021, Class 1 Laser Product

- **Technical parameters for laser radiation**
  - Max Radiation Output: 140 nJ
  - Wavelength: 940 nm
  - Pulse Duration: 6 ns

- **Safety labels**

  Laser safety labels are affixed to the exterior of the device, indicating the product classification and warning symbols. Do not remove or damage these labels.

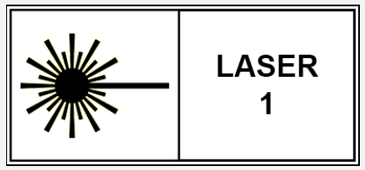

Guidance

- Seat height setting directly affects the performance of the Assisted Driving System.
- When the seat is at its lowest height setting, the system's rear detection capability is restricted.
- In this state, the system may not be able to identify some obstacles directly behind in time. Please drive cautiously, actively observe the surroundings, and be prepared to take control at any time.

- **Important operating guidelines**
  - **Mode switching:** In Co-Pilot mode, press the Manual (M) button on the left at any time to switch to full manual control.
  - **Emergency handling:** If the system stops unnecessarily or chooses an unsuitable path on an otherwise safe route (such as narrow passages, special terrain) because it is being overly cautious in Co-Pilot/Co-Pilot+ mode, the user can:
    - Immediately press the Manual (M) button to take over control.
    - Drive the device manually through the section safely.
    - After passing, switch back to Co-Pilot/Co-Pilot+ mode.

Warning

- Do not apply film, spray, or install any accessories that may block detection in the sensor area.
- Do not disassemble, modify, or attempt to repair sensor components without authorization.
- Avoid direct observation of the laser sensor window through optical instruments (such as microscopes, telescopes).
- Sensor performance may degrade under the following conditions; please reduce speed and allow sufficient braking distance:
  - Bad weather (rain, snow, haze);
  - Direct strong light or backlight;
  - Dust or water stains on sensor surface;
  - Transparent, highly reflective, or sound-absorbing materials;
  - Very thin obstacles (wires, branches);
  - Complex reflective surfaces (mirrors, glass walls);
  - Puddles.
- The Assisted Driving System has inherent sensor blind spots regardless of seat height.
- The user assumes ultimate responsibility for driving safety and must not rely solely on the Assisted Driving System.

Caution

- **Routine Inspection:** Periodically check that sensor mountings are secure.
- **Proper Cleaning:** Clean the sensor windows using only a soft, slightly damp cloth. Do not use high-pressure water jets or corrosive cleaning agents on the sensors.
- **Normal Use:** Under normal operating conditions, the laser radiation level of this product is below the accessible emission limit and classified as a Class 1 laser product.
- **Maintenance Limitation:** Users must not perform any maintenance that may lead to exposure to laser radiation. Such maintenance must be completed by trained professionals.
- **Troubleshooting:** If persistent sensor obstruction alarms, functional abnormality prompts, or error codes appear, stop using all assisted driving functions and contact your local dealer or customer service immediately.

6.2.1 Co-Pilot

Short press the "C" button on the device to cycle through driving modes.

When the "Co-Pilot" icon and text are displayed on the device screen, it means that the Co-Pilot intelligent assisted driving mode has been successfully activated.

In Co-Pilot mode, the device's driver assistance system provides 360° collision avoidance support. The system continuously monitors the surroundings using onboard sensors and helps prevent collisions by applying deceleration and braking when risks are detected.

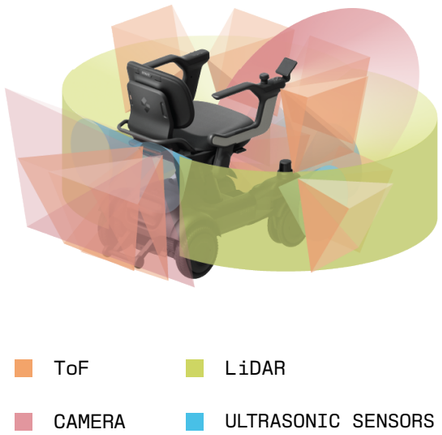

6.2.2 Co-Pilot+

- In any mode, press and hold the trigger button on the control joystick to temporarily switch to Co-Pilot+ mode; after releasing the trigger button, the device immediately returns to the previous mode.
- In any mode, press and hold the C button to switch to Co-Pilot+ mode.
- In this mode, the device supports dynamic pathfinding and route maintenance, allowing it to actively recalculate and follow new routes to bypass obstacles.

Working Principle

- **Command trigger:** The device moves in the desired direction as soon as the joystick is first engaged.
- **Dynamic obstacle avoidance:** If an obstacle is detected on the travel path, the system will automatically calculate and try to find a new feasible path along the edge of the obstacle, rather than simply braking and stopping.
- **Continuous movement:** The system is designed to maintain forward motion whenever possible. If no safe path is available ahead or to either side, the device may automatically reverse, steer, or turn around to recover and continue moving.

Warning

- **Functional limitation recognition:** Co-Pilot+ is an advanced driver assistance feature, not a fully autonomous driving system. Path planning and decision-making rely on sensor data and may be unreliable in complex, dynamic, or unpredictable environments.
- **Operator's ultimate responsibility:** You must always maintain a high level of attention and be prepared to brake at any time. System behavior should be treated as guidance only; you must continuously monitor your surroundings and make the final determination regarding safety.
- **Do not rely solely:** Do not be distracted or take risks because this function is enabled. You remain solely responsible for the safe operation of the device at all times.

6.3 Autonomous Driving Modes

Guidance

All autonomous driving functions described in this section can only be used after the device has been bound and activated.

Autonomous Driving Mode combines several advanced driving functions based on environmental perception and path planning to provide a more convenient mobility experience in specific scenarios. This mode enables intelligent decision-making and control by fusing data from multiple sensors.

- **Environmental perception and map display**

The system scans the environment in real-time through dual LiDARs and dynamically displays a color map on the screen:

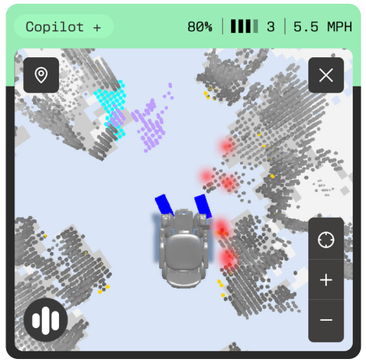

- **Blue area:** Safe drivable area detected by LiDAR, with no offline map loaded.
- **White area:** Unknown area not yet scanned.
- **Black markings:** Identified stationary obstacles (such as walls, furniture).
- **Purple markings:** Moving obstacles.
- **Blue markings:** Identified human feet.
- **Red markings:** Curbs or steps.
- **Yellow markings:** Small obstacles.
- **Green area:** Safe passable area scanned by LiDAR, with an offline map loaded.

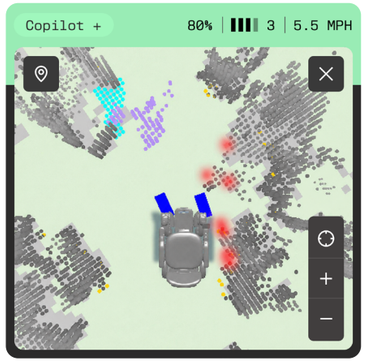

6.3.1 Pathfinder

Pathfinder Mode allows users to select a visible destination directly on the touchscreen. The device automatically plans a route and navigates to the selected location. This mode offers high flexibility, as it does not require a previously visited destination.

- **Operating steps**

❶ Mode activation

In any mode, press and hold a target point on the Live View Panel to enter Pathfinder mode and start route planning.

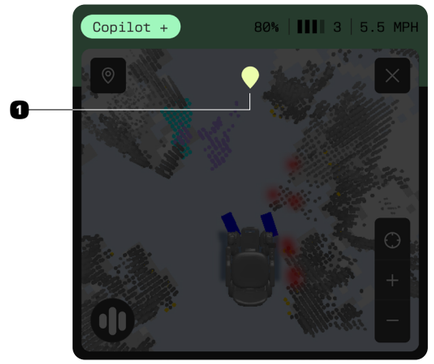

❷ Browsing and selecting targets

a. Use the + button and – button to zoom or drag with one finger to explore the environment on the Live View Panel.

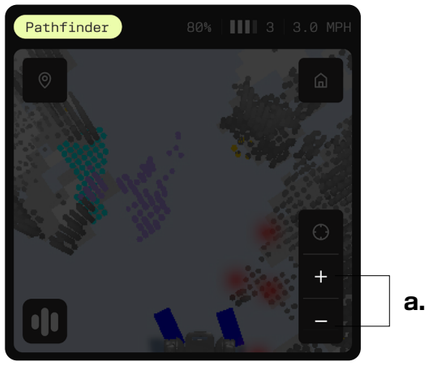

b. Short press on the position you want to go to set it as a target point.Press "Start" to move.

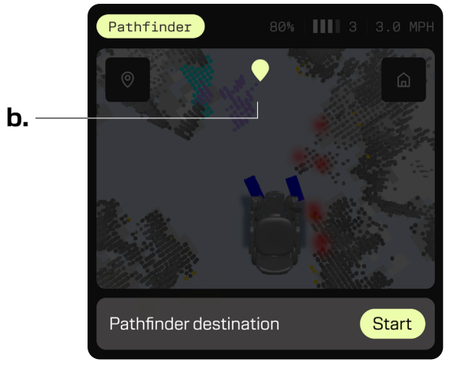

❸ Activation and Execution:

a. Once a target is set, the device plans the route and is ready to move.

b. You may move the joystick at any time to cancel Pathfinder navigation.

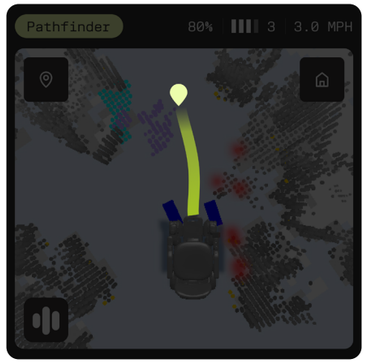

c. Arrived at the destination.

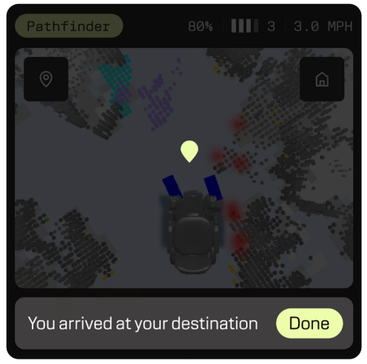

⚠ Caution

- The target point should be set within the green scanned area or the blue area.
- During driving, continuously observe the dynamic markings on the Live View Panel and be prepared to take over at any time.

6.3.2 Waypoint

ⓘ Guidance

- **Mode Description**
  Set frequently visited locations as "waypoints" on a saved map. This allows fast and accurate navigation with a single click or via voice commands.

- **Prerequisites and Usage Limitations**
  - **Mapping Requirements:** A map of the current environment (e.g., your home) must be completed and saved.
  - **Location Memory:** Destinations must be locations previously visited and registered by the device.
  - **Usage Scope:** To ensure safety, Waypoint Mode is restricted to private indoor environments such as homes. Do not use this mode on public roads, sidewalks, or in open public spaces.

❶ Build and save maps

a. Press driving mode button to enter live view.

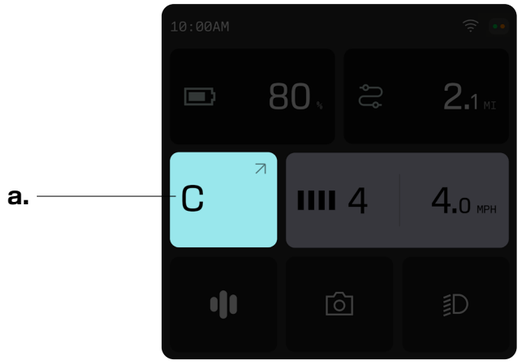

b. Press Waypoints icon.

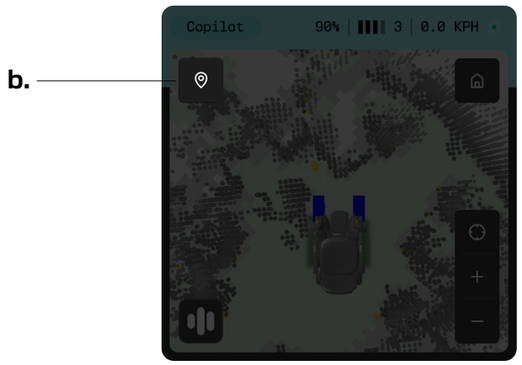

c. Enter map list.

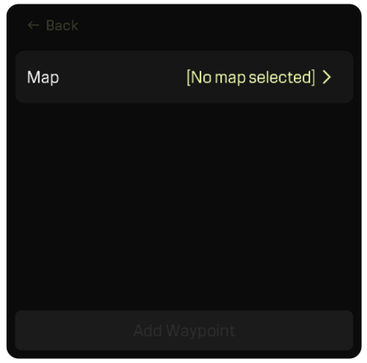

d. Press create map button.

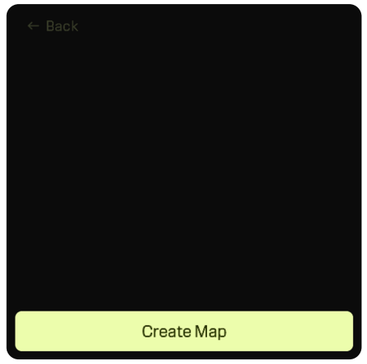

e. Enter map name and press 'Create' to create a map.

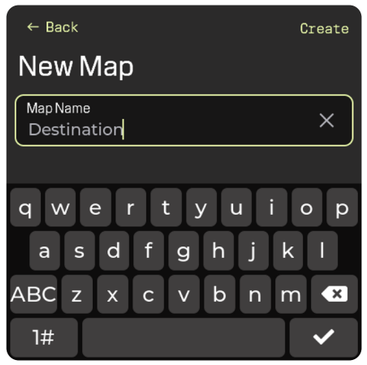

f. Drive vehicle around to read the surroundings.

> ⚠️ **Caution**
>
> - To successfully register the map, drive the vehicle for at least 5 meters until the word "Template" disappears.

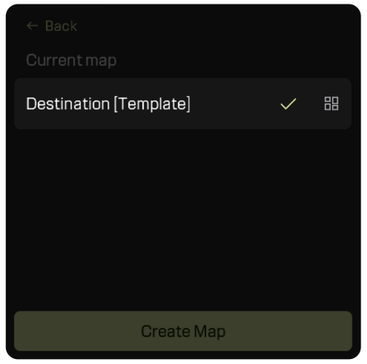

g. Map is ready to use.

❷ Creating Waypoints

Save the current location using one of the following methods:

a. Voice command (Internet connection required)

- Drive the device to the target location.
- Long press to wake up AI assistant.

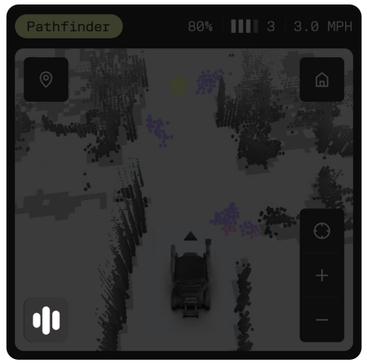

- Tell AI: “Mark this place as...”, release once finish.

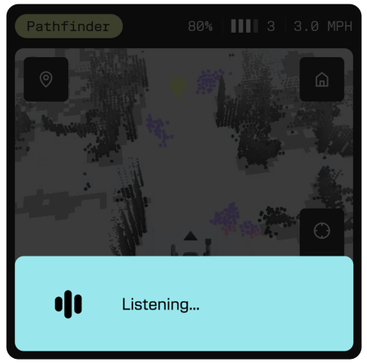

- AI assistant processes information

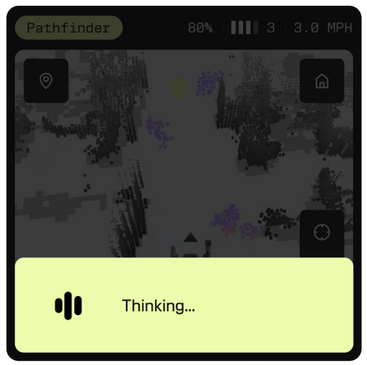

- New waypoint registered.

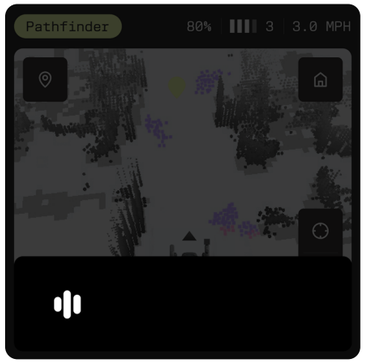

b. Manual creation

- Drive the device to the target location.
- Press driving mode button to enter live view

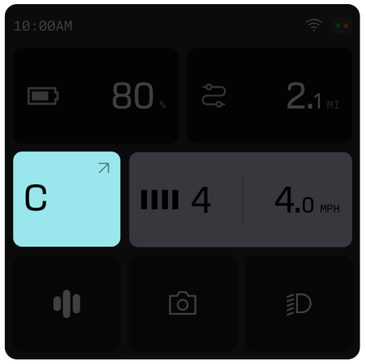

- Press Waypoints icon

- Press "Add Waypoint"

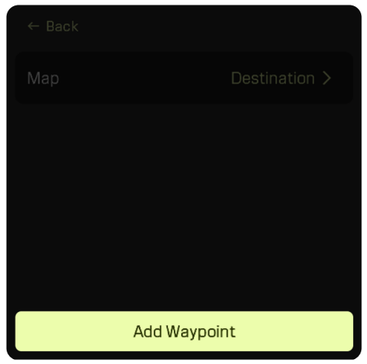

- Enter Waypoint name

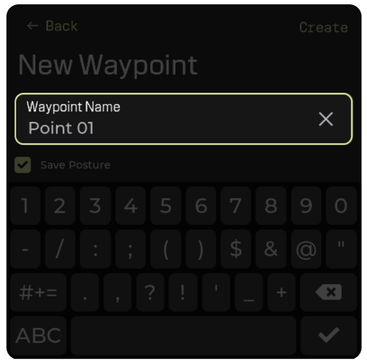

- Press "Create" to create a Waypoint

❷ Waypoint navigation

Start navigation to a saved waypoint using one of the following methods:

a. Voice command (Internet connection required)

- Long press to wake up AI assistant.

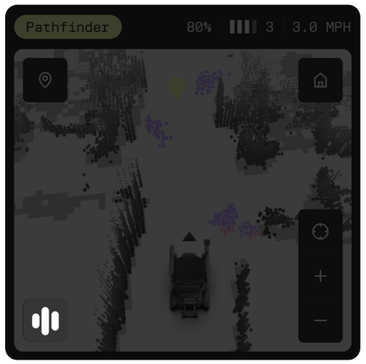

- Tell AI: “Take me to...”, release once finish.

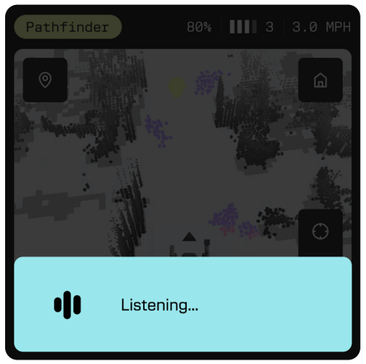

- AI assistant processes information and automatically takes you to the destination.

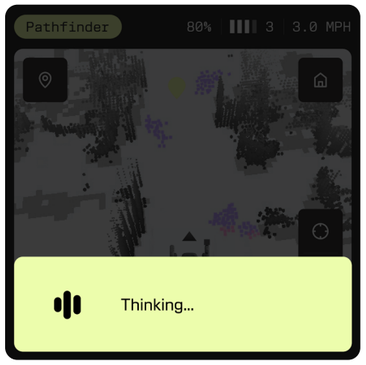

- Arrived at destination.

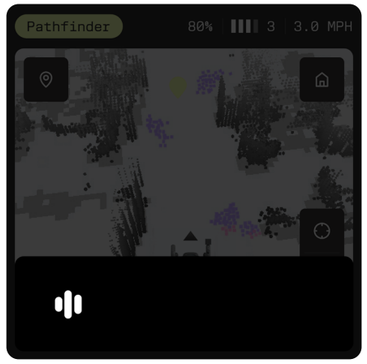

b. Manual navigation

- Tap the "waypoint" icon on the Live View Panel to open the Destination List.

- Select the waypoint you want to go, press it on the list.

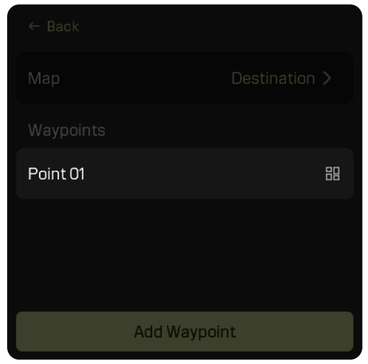

- Tap "Start" to begin the trip, and the device will plan the path and drive automatically.

- Press 'Done' once arrived

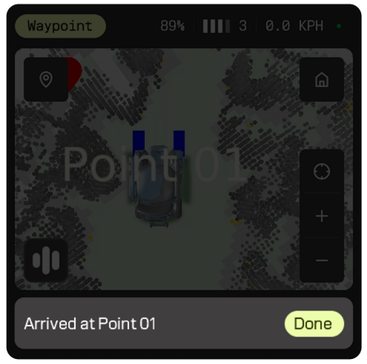

Network requirements

- When using the Voice Assistant to create waypoints or start waypoint navigation, the device must be connected to the internet via Wi-Fi.
- Manual operation via the touchscreen does not require internet access.

Important Notice

- This mode is only effective within the corresponding saved map environment. If the environment layout changes significantly, re-mapping is required.
- During navigation, you still need to observe the surrounding environment and be prepared to take over manually at any time.

Caution

- **System perception boundaries and important safety statements**

The system's obstacle recognition is based on preset algorithms and sensor physical characteristics. The system has the following inherent limitations, and users must be aware of them and actively observe the environment.

  - **Low fixed obstacles:** Fixed obstacles such as curbs or speed bumps with a continuous height below 2 inches (50 mm) are considered crossable by the system and will not trigger active braking. Users must make their own judgment and use Manual Mode when necessary.
  - **Dynamic biological detection:** For moving targets such as human feet or pets (e.g., cats and dogs), the system attempts to recognize them as non-crossable obstacles, even if their height is below the fixed obstacle threshold, and may trigger braking. However, this function is not fully reliable and should not be solely relied upon.
  - **Specific object detection instability:** The detection performance of the system for the following types of obstacles may decrease or be unstable, which may lead to missed detection and possible collisions:
    - Transparent or highly reflective objects (glass doors, partitions, mirrors, polished metal, black marble, water-filled ditches);
    - Depressions smaller than 60 cm or with irregular edges (potholes, step edges);
    - Objects with special optical characteristics (light-absorbing materials, fully reflective mirrors, reflective sequins).

- **Sensor Field of View (FOV) limitations**
  - The system cannot monitor all directions simultaneously. For example, the detection range and capability of the rear sensors are limited.
  - Detection may be more reliable in certain directions (such as the front right), but continuous and reliable detection of small targets like human feet, in all directions (especially at the rear) cannot be guaranteed.
  - The user remains fully responsible for monitoring the environment and avoiding hazards. Do not rely entirely on the system.

7. Storage and Transport

7.1 Storage

To maintain optimal performance and extend the service life of your device, adhere to the following storage guidelines.

• Storage environment

- Store the device indoors or in a dry, covered place.
- The ambient temperature must be maintained between -15°C and 40°C (5°F to 104°F).
- The ambient humidity should be between 8% and 40%.
- Do not place the device on its side or upside down.
- Do not store the device near fire sources, flammable gases, direct sunlight, or in locations it may be exposed to rain.

Caution

- **Long-term battery storage**
  Operation: If the device will be stored for an extended period, charge the battery to 50% before storage and recharge it at least once a month during storage.
- **Risk Notice:** Prevent the battery from being permanently damaged due to over-discharge, which may make it impossible to recharge.

- **Avoid harsh environments**
  Operation: Do not store the device for a long time in areas with heavy dust or sand, high salt exposure (such as near the ocean), or high sulfur content (such as hot springs).
  Risk Notice: Foreign objects and corrosive gases may enter the device, causing corrosion of the frame and screws, or damage to precision sensors.

- **Prevent physical compression**
  Operation: Do not place heavy objects on the device or stack the device with other heavy items.
  Risk Notice: Compression from heavy objects may deform or damage the housing, panels, or other components.

- **Long-term storage guidelines (More than one month)**
  For storage of one month or longer, we recommend:
  1. Remove the battery from the device;
  2. Charge the battery to 50%;
  3. Store the device and battery separately in the required environment;
  4. Recharge the battery at least once a month, reinstall it, and check device functions;
  5. Fully charge the battery and verify all functions before resuming use.

7.2 Transportation

When moving and transporting this device, follow the instructions below to ensure safety.

• Transportation instructions

- **Manual Handling:** When carrying the device by hand, please hold the dedicated parts specified in this manual; do not grasp the Screen, joystick, or other non-rigid parts.
- **Public Transportation:** When taking public transportation, check and comply with the specific rules of the transport operator in advance.
- **General Transport:** When unoccupied and unloaded, this device is suitable for standard land and air transport.

Warning

- **No handling while occupied**
  Operation: Do not lift or hoist the device while it is occupied.
  Risk Notice: The device may fall or tip over, which may result in serious injury or device damage. Remove necessary components before handling and consider the weight of each part.

- **Not for use as a vehicle seat**
  Operation: Do not use this device as a passenger seat in a motor vehicle.
  Risk Notice: This will not only damage the device but may also cause secondary injuries during vehicle movement or a collision, causing serious injury.

- **Slope capability**
  Operation: If the anti-tip bar touches the ground on a slope, do not force the device onto that slope.
  Risk Notice: The anti-tip bar touching the ground means the slope is too steep; forced operation will lead to loss of control or tipping.

Caution

- **Securing inside the vehicle**
  Operation: When transporting the device in a car trunk or other vehicle, ensure that each component is safely secured to prevent movement and collision.
  Risk Notice: Unsecured components will shake or tip over during transport, leading to device damage.

- **Using a vehicle lift**
  Operation: When using a vehicle lift, ensure that the device is securely fastened to the platform according to the lift manufacturer's instructions.
  Risk Notice: Improper securing may cause the device to fall, which could result in severe damage.

- **Aviation transport tips**
  - If you plan to take this device on a commercial flight, please contact the airline in advance to confirm their boarding and check-in policies. Airlines may request specific parameters such as battery specifications and device dimensions. Please note that policies vary by airline, and some may refuse to transport such devices.
  - The Long-range Battery cannot be transported by air as its energy capacity exceeds aviation regulatory limits.

7.3 Qstraint-QLK 150 Support

- The rear chassis features industry-standard universal mounting holes compatible with the physical specifications of the Qstraint-QLK 150 docking system. This design allows the device to be secured in a vehicle using compatible docking systems.

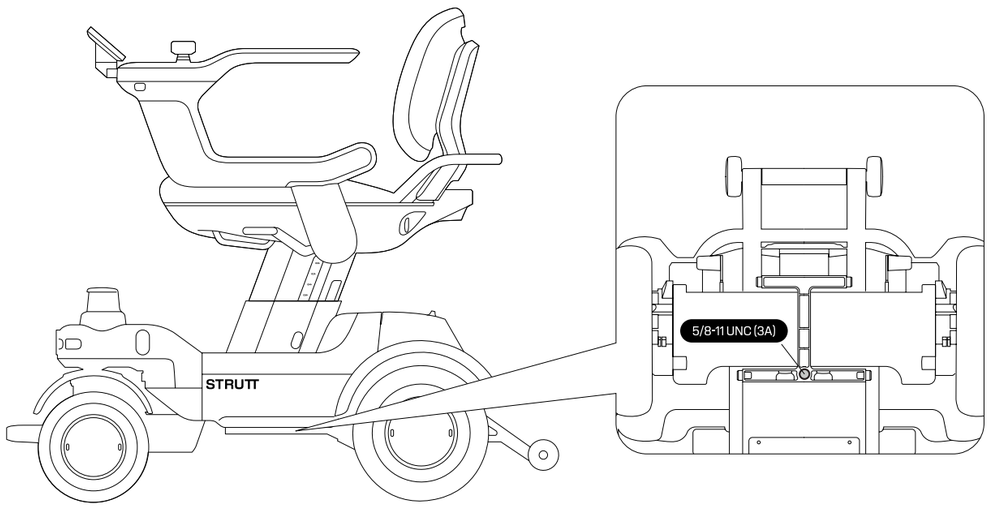

Warning

- **Installation and usage responsibility:**
  - Following compatibility verification, installation must be performed by a professional technician using genuine, model-specific Qstraint accessories.
  - Do not use uncertified, worn, damaged, or mismatched accessories for securing the device.
  - Users and vehicle operators must ensure the device is firmly secured to the vehicle via a reliable system before each transport.
  - Strutt assumes no legal liability for device slippage, tipping, personal injury, or accidents caused by compatibility issues, non-standard accessories, improper installation, or securing failure.

- **Installation and use:**
  Operation: Do not use this device as a passenger seat in a motor vehicle.
  Risk Notice: This will not only damage the device but may also cause secondary injuries during vehicle movement or a collision, causing serious injury.

- **Slope capability**
  - Before each securing, check the mounting points and accessories for wear, cracks, or deformation.
  - Make sure the device is powered off, and the parking brake is engaged.

Caution

- **Accessory and compatibility statement:**
  - This device only provides physical mounting interfaces that comply with general industry standards.
  - Strutt has no official partnership with Qstraint and has not performed joint testing or certification for product compatibility.
  - Users must contact Qstraint or an authorized dealer to confirm model compatibility and installation requirements. Dedicated securing accessories and related installation components must be purchased by the user.

8. Maintenance and Care

Follow the maintenance schedule below to ensure safety, maintain optimal performance, and extend service life. This schedule is based on normal operating conditions. Reduce maintenance intervals when operating in harsh environments (e.g., heavy dust, high humidity, or frequent use).

Component	Maintenance Cycle	Maintenance Method
Cleaning (Body and Tires)	Regularly	1. Wipe the body with a soft damp cloth. 2. Wipe the wheels using a damp towel only, ensuring that no water enters the device.
Sensor System	Before each use	1. Gently wipe sensor lenses with alcohol-free wipes. 2. Check for cracks, dirt, or obstructions.
Tires	Quarterly	1.**Tread wear:** It is recommended to replace the tire when the tread wears down to the internal wear mark. 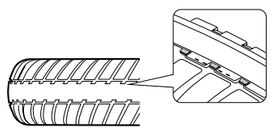 2.**Exterior damage:** Replacement is recommended if the tread or sidewall exhibits deep cracks, abnormal scraches that expose the fabric layer, or chunks of rubber come off the tread or sidewall. 3.**Strutural damage:** Tires must be replaced if they exhibit localized collapse, noticeble bulging, or separation of the tire from the rim (tire detachment). 4. **Service life:** Tires should be carefully inspected if they have been in use for more than 1 year from the manufacture date, and replacement is recommended after 2 years.
Mechanical Fasteners	Weekly	1. Check the screws and fasteners on critical parts (such as footrests, seats, and wheels) for loosening. 2. If loose, use appropriate tools to tighten them to the specified torque.
Braking System	Monthly	1. Test the parking brake function in a safe, open space to ensure that the device can stop reliably. 2. If abnormal braking distance or noise is found, please contact after-sales service.
Battery and Charging System	Monthly	1. Check if the charging port is clean, dry, and free of deformation. 2. Check if there is an abnormal drop in battery range or if the device displays battery-related error alarms.
Moving Parts Inspection	Quarterly	1. Check if all moving parts (such as steering and footrest flip mechanisms) operate smoothly without abnormal noise. 2. Caution: Do not apply unauthorized grease, oil, or lubricants to any part of the device.
Comprehensive Inspection	Annually	It is recommended to contact your local dealer for a comprehensive performance and safety inspection.

Warning

- **Safety first:** Always power off the device and ensure that it is positioned on a stable surface to prevent accidental movement before performing maintenance.
- **No rinsing:** Do not use water to directly clean the device. Use a slightly damp cloth only to prevent electrical failure, short circuits, or corrosion.
- **No solvents:** Do not use benzene, paint thinners, petroleum-based solvents, or any other corrosive or abrasive cleaning agents.

Caution

- **Solid tire characteristics:** Although solid tires cannot puncture, they still wear over time, and shock absorption changes as they wear. Check wear regularly.
- **Use original parts:** Use only Strutt original parts for replacements to ensure safety and system compatibility.
- **Professional service:** Repairs or adjustments not covered in this schedule must be performed by authorized technicians. Unauthorized disassembly may void the warranty or cause safety risks.
- **Records:** It is recommended that users keep a simple record of the date and details of each maintenance session to track the device's status.

9. Technical Specifications

Strutt ev[1]		
Device Parameter	Device Dimension (L×W×H)[1]	Imperial: 41.2×23-26×34.3-38.7 in Metric: 1046×584-660×872-982 mm
	Weight (Excluding Battery)	≈ 63.8 kg (≈ 140.7 lb)
	Heaviest Module Weight	≈ 19.8 kg (≈ 43.7 lb)
	Working Temperature	-10°C to +45°C
	Waterproof Rating[2]	IPX5
	Altitude Range	0-5,000 m (≈ 0-16,404 ft)
Use Scope	Seat Width	Level 1: ≈ 442 mm (≈ 17.4 in) Level 2: ≈ 480 mm (≈ 18.9 in) Level 3: ≈ 518 mm (≈ 20.4 in)
	Seat Angle	5°
	Seat Height (Measured from footrest)	Level 1: ≈ 400 mm (≈ 15.7 in) Level 2: ≈ 420 mm (≈ 16.5 in) Level 3: ≈ 440 mm (≈ 17.3 in) Level 4: ≈ 460 mm (≈ 18.1 in) Level 5: ≈ 480 mm (≈ 18.9 in) Level 6: ≈ 500 mm (≈ 19.7 in)
	Seat Cushion Width	≈ 462 mm (≈ 18.2 in)
	Seat Cushion Depth	≈ 460 mm (≈ 18.1 in)
	Armrest Height (Measured from seat)	Level 1: ≈ 220 mm (≈ 8.7 in) Level 2: ≈ 240 mm (≈ 9.4 in) Level 3: ≈ 260 mm (≈ 10.2 in)
	Armrest Flip-up	Yes
	Backrest Angle	Level 1: 13° Level 2: 16° Level 3: 19°
	Backrest Height (Measured from seat)	Level 1: ≈ 350 mm (≈ 13.8 in) Level 2: ≈ 375 mm (≈ 14.8 in) Level 3: ≈ 400 mm (≈ 15.7 in) Level 4: ≈ 425 mm (≈ 16.7 in)
	Screen Angle	Level 1: -30° Level 2: 0° Level 3: 30°
	Weight Capacity	160 kg (≈ 350 lbs)

Driving Performance	Range[3]	32 km (20 miles)
	Maximum Speed[4]	Level 1: 1.6 km/h (1 mph) Level 2: 3.2 km/h (2 mph) Level 3: 4.8 km/h (3 mph) Level 4: 6.4 km/h (4 mph) Level S: 8 mph / 12.9 km/h
	Ground Clearance	80 mm (≈ 3.1 in)
	Obstacle Clearance	50 mm (≈ 2 in)
	Turning Radius	780 mm (≈ 30.7 in)
	Maximum Climbing Slop[5]	Approximately 13°
	Front Wheel	Actuated Steering
	Front Wheel Tire	Solid Tire, ≈ 203 mm (≈ 8 In)
	Rear Wheel	Rear-wheel Drive
	Rear Wheel Tire	Solid Tire, ≈ 254 mm (≈ 10 in)
	Suspension	4-wheel Independent Suspension
Intelligent Driving	Intelligent Sensor	Lidar Sensor: 2 units ToF Sensor: 10 units Ultrasonic Sensor: 6 units Camera: 2 units
	Intelligent Driving	Yes
Other Specifications	Display	4-inch LCD Display Brightness: 1000 nits
	Backup Camera	Yes
	Headlight	Yes
	Freewheel Mode	Yes
	USB Type-C Output	PD Protocol (5V-3A, 9V-3A, 12V-2.5A)
Device Package	Package Dimension (L×W×H)	A: 27.5×22×19 Inches B: 28.2×25.6×18.9 Inches C: 29.7×24.4×19.3 Inches
	Package Total Weight	A: 29.5 Kg B: 30.5 Kg C: 24.3 Kg

[1] Height is measured with standard backrest and may vary depending on seat height and backrest angle. Width may vary depending on seat width.

[2] The IPX5 waterproof rating is measured under controlled laboratory conditions. Waterproof performance is not permanent and may degrade due to daily wear or impact. Do not charge the vehicle in wet or rainy environments. Damage caused by liquid ingress is not covered under warranty.

[3] Actual driving range, obstacle clearance capability, and overall performance are influenced by a variety of factors. These include, but are not limited to: product configuration, battery health and age, driving behavior, total payload, terrain, and environmental conditions. Please note that theoretical test data serves as a reference and may not reflect performance in all real-world scenarios.

[4] The maximum driving speed of the product is subject to local laws and regulations. Please comply with locally applicable legal limits and permitted speed ranges. When traveling at higher speeds over discontinuous surfaces (including but not limited to speed bumps, ramps, or steps), vehicle stability may be affected by road conditions, obstacle shape, speed, occupant posture, and center of gravity. There is a risk of instability or even rollover. Please maintain safe driving awareness and take responsibility for driving safety.

[5] The maximum climbable slope is approximately 13°, based on testing under a normal seated posture, a 160 kg load, and the seat at its highest position on a smooth slope. Additional accessories or changes to the vehicle's center of gravity may affect stability; steep slope operation should be avoided.

Long-range Battery	
Dimension (L x W x H)	≈ 204 x 108 x 310 mm (≈ 8 x 4.3 x 12.2 in)
Weight	6 ± 0.5 kg (13.23 ± 1.10 lbs)
Type	Lithium iron phosphate
Nominal Voltage	32V
Typical Capacity/Typical Energy	20Ah/640Wh
Rated Capacity/Rated Energy	18.5Ah/592Wh
Limit Charging Voltage	36V
Charging Time	0~80% capacity: ≈ 2 hours 0~100% capacity: ≈ 4 hours
Waterproof Rating	IPX6
Working Temperature	-10°C to +45°C
Charging Temperature	2 to 45°C
Storage Temperature	0 to 25°C

Charger	
Dimension (L x W x H)	≈ 199 x 88.5 x 47 mm (≈ 7.83 x 3.48 x 1.85 in)
Weight	≈ 1.2 kg (≈ 2.65 lbs)
Input	100-240 V (AC), 50-60 Hz, 5.0A Max
Output	36.0V ⎓ 9.0A (DC)
Maximum Output Power	324.0W (Max)
Waterproof Rating	IPX1
Working Temperature	0 to 45°C
Altitude Range	0-5,000 m (≈ 0-16,404 ft)

Notes

Product functions, configurations, specifications, and performance may vary to comply with local laws and regulations. They may also change over time due to product updates, software updates, or technological improvements.

- Height is measured with standard backrest and may vary depending on seat height and backrest angle.
- The IPX5 waterproof rating is measured under controlled laboratory conditions. Waterproof performance is not permanent and may degrade due to daily wear or impact. Do not charge the vehicle in wet or rainy environments. Damage caused by liquid ingress is not covered under warranty.
- The theoretical distance range test was conducted in low-power mode, which does not compromise the device's maximum operating speed. The design aims to optimize energy consumption through measures such as turning of indicator lights and reducing screen brightness.
- The maximum driving speed of the product is subject to local laws and regulations. Please comply with locally applicable legal limits and permitted speed ranges. When traveling at higher speeds over discontinuous surfaces (including but not limited to speed bumps, ramps, or steps), vehicle stability may be affected by road conditions, obstacle shape, speed, occupant posture, and center of gravity. There is a risk of instability or even rollover. Please maintain safe driving awareness and take responsibility for driving safety.
- The maximum climbable slope is approximately 13°, based on testing under a normal seated posture, a 160 kg load, and the seat at its highest position on a smooth slope. Additional accessories or changes to the vehicle's center of gravity may affect stability; steep slope operation should be avoided.

10. FAQs and Solutions

Please refer to the following table to troubleshoot based on the symptoms encountered:

Symptom	Possible Cause	Solutions
Device cannot start	1. The battery is depleted. 2. The power switch was not turned on correctly. 3. The battery was not properly connected.	1. Charge the device for at least 30 minutes before trying to start. 2. Ensure that the power switch is pressed and held for 1-2 seconds until the screen lights up. 3. Check if the battery is fully inserted. Try to start the device after reinserting the battery.
Sudden stop during driving	1. Low battery, triggering low voltage protection. 2. The parking brake was accidentally activated. 3. An obstacle was detected by the system and the device was braked automatically.	1. Charge the device immediately. 2. Check and confirm that the parking brake is released. 3. Check for obstacles around the device, clear them and try to restart.
The cruising range is significantly reduced.	1. The battery was not fully charged. 2. Tires were severely worn. 3. Frequent starts/stops, overloading, or driving on uneven roads. 4. Natural battery aging.	1. Always charge to 100%. 2. Regularly check tire wear; replace if excessive. 3. Develop smooth driving habits and avoid overloading. 4. If the battery is old, contact customer service for a health check.
Device emits abnormal alarm	1.1. Tilt angle was too large. 2. Sensors were blocked or dirty. 3. Internal system error.	1. Move the device to flat ground. 2. Clean sensor surfaces (e.g., cameras, ultrasonic sensors). 3. Record the error code on the screen and contact customer service.
Abnormal charger indicator	11. Poor power connection. 2. The battery or charger temperature was too high/low. 3. Charger or battery fault.	11. Check if all cables are fully inserted. 2. Move the charger and battery to a 2°C-45°C environment. 3. If the light is still abnormal, **stop use** and contact customer service.

11. Trademarks and Legal Statement

11.1 Trademark Statement

Strutt is a registered trademark or trademark of RoboSpectra Technology Pte. Ltd. in multiple countries worldwide.
All other product names, company names, or logos mentioned herein are the property of their respective trademark owners.

11.2 Copyright Statement

© 2025 RoboSpectra Technology Pte. Ltd. All rights reserved.
This Strutt ev[1] User Manual, including all text, images, charts, and layout, is protected under international copyright laws and treaties.

Without prior explicit written consent from RoboSpectra Technology Pte. Ltd., no part of this manual may be reproduced, transmitted, translated, or stored in a retrieval system in any form or by any means (electronic, mechanical, photocopying, recording, or otherwise).

11.3 Legal Disclaimer

11.3.1 Product Performance and Right to Change

We are committed to the continuous improvement of our products. We reserve the right to change the design, specifications, and software of this product at any time without prior notice.

The information in this manual is believed to be accurate and reliable at the time of publication. However, typographical errors or technical inaccuracies may occur, and the Company does not guarantee that the manual is completely error free.

11.3.2 Limitation of Liability

This product is intended to be used in accordance with the instructions in this user manual. The Company is not responsible for any device damage or injury caused by misuse, abuse, negligence, unauthorized modification, use of non-original accessories, or failure to comply with the operation and safety instructions in this manual.

To the maximum extent permitted by law, the Company and its suppliers shall not be liable for any indirect, incidental, special, or consequential damages (including but not limited to loss of data, loss of profits, business interruption, or injury) arising from the purchase or use of this product.

In no event shall the company's total liability exceed the actual purchase price paid for the device.

11.3.3 Compliance with Laws and Regulations

It is the user's responsibility to understand and comply with all local laws, regulations, and ordinances in their area regarding the use of personal mobility devices, including but not limited to laws regarding usage areas, speed limits, age limits, and safety equipment.

The operator assumes sole and final responsibility for the safe and lawful operation of this device in all public and private settings.

11.4 Functional Disclaimer

The intelligent functions (such as obstacle avoidance, autonomous driving, etc.) included in this product are assisted driving features designed to improve convenience, but they cannot replace the operator's judgment and active control.

The operator must maintain control of the device at all times and remain prepared to take manual control immediately. The Company assumes no liability for any accidents or damages resulting from over-reliance on these assisted driving features.

12. Contact Information

12.1 Manufacturer

- **Registered Entity:** Strutt Pte. Ltd.
- **Registered Trademark:** STRUTT®
- **Registered Business Address:** 1 BULIM LANE 2, #05-53 Bulim Square, Singapore 648110

12.2 Importer

- **EU & UK**
  - **Registered Entity:** STRUTT B.V.
  - **Registered Address:** Verdunplein 17, UNIT C2208, 5627SZ Eindhoven

- **United States**
  - **Registered Entity:** Strutt USA Inc.
  - **Registered Address:** 3711 Long Beach Blvd, Suite 4057 #1018, Long Beach, CA 90807, United States

- **Singapore**
  - **Registered Entity:** Strutt Pte. Ltd.
  - **Registered Business Address:** 1 BULIM LANE 2, #05-53 Bulim Square, Singapore 648110

- **Hong Kong**
  - **Registered Entity:** RoboSpectra HK Limited
  - **Registered Address:** UNIT 417, 4TH FLOOR, TOWER TWO, LIPPO CENTRE, NO. 89 QUEENSWAY, ADMIRALTY, HONG KONG.

12.3 Agent

- **EU**
  - **Registered Entity:** SUNGO Europe B.V.
  - **Registered Business Address:** Fascinatio Boulevard 522, Unit 1.7, 2909VA Capelle aan den IJssel, The Netherlands
  - **Contact:** ec.rep@sungogroup.com

- **United Kingdom**
  - **Registered Entity:** SHARE INFO LTD
  - **Registered Business Address:** 3rd Floor, Office C, Townend House, Park Street, Walsall. West Midlands. WS1 1Ns, United Kingdom
  - **Contact:** 0044-7957-186-609

Technical Support
Website: support.strutt.inc/info/ev1
Email: support@strutt.inc